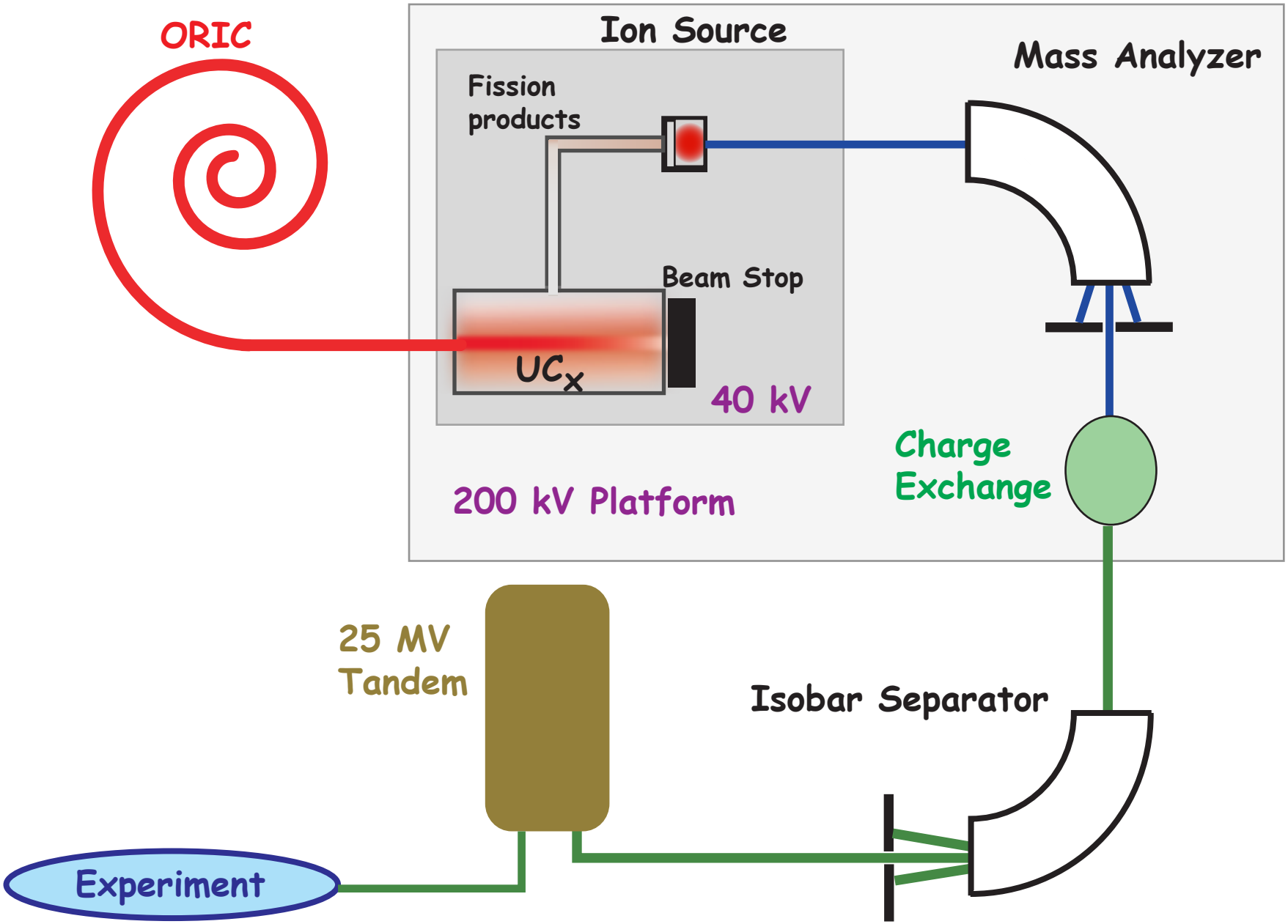Isotope Separator On-Line (ISOL) Technique at HRIBF