Experiences with the digital system for the Fragment Mass Analyzer DFMA

Darek Seweryniak
Argonne National Laboratory

ANL collaboration

J.T. Anderson,
M.P. Carpenter,
H.M. David,
T. Lauritsen,
T. Madden,
M. Oberling,
D.S.,
…

Started with the GRETINA DAQ,
tailored to our needs,
in parallel with DGS

Outline

- FMA detection system
- FMA DDAQ
  - Hardware
  - Firmware
- Experiences
  - DFMA
    - High rates
    - Fast decays
    - Wide coincidence window
    - at BGS
  - DFMA+DGS
    - Cross triggering
    - Clock synchronization

Argonne Fragment Mass Analyzer

Mass resolution:
$\delta M/M \sim 1/350$
Angular acceptance:
$\Delta\Omega$=8 msr(2 msr with GS)
new quad 12 msr
Energy acceptance:
$\Delta E/E$=+/-20%
M/Q acceptance: $\Delta(M/Q)/(M/Q)$=10%

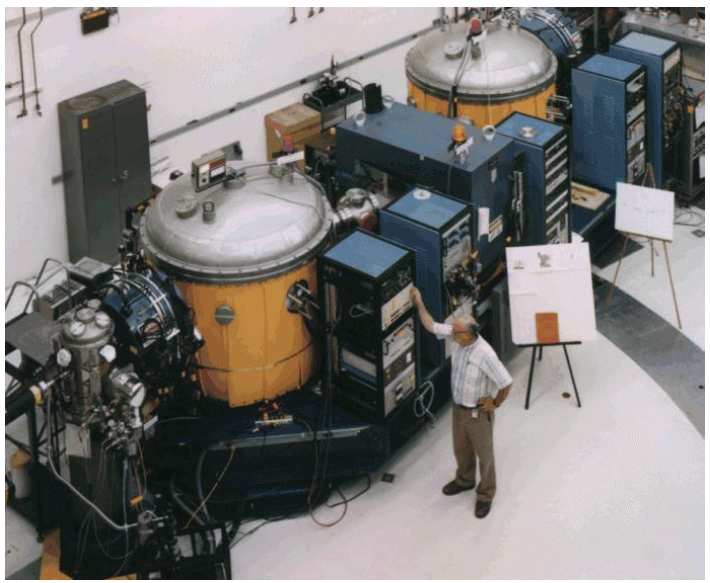

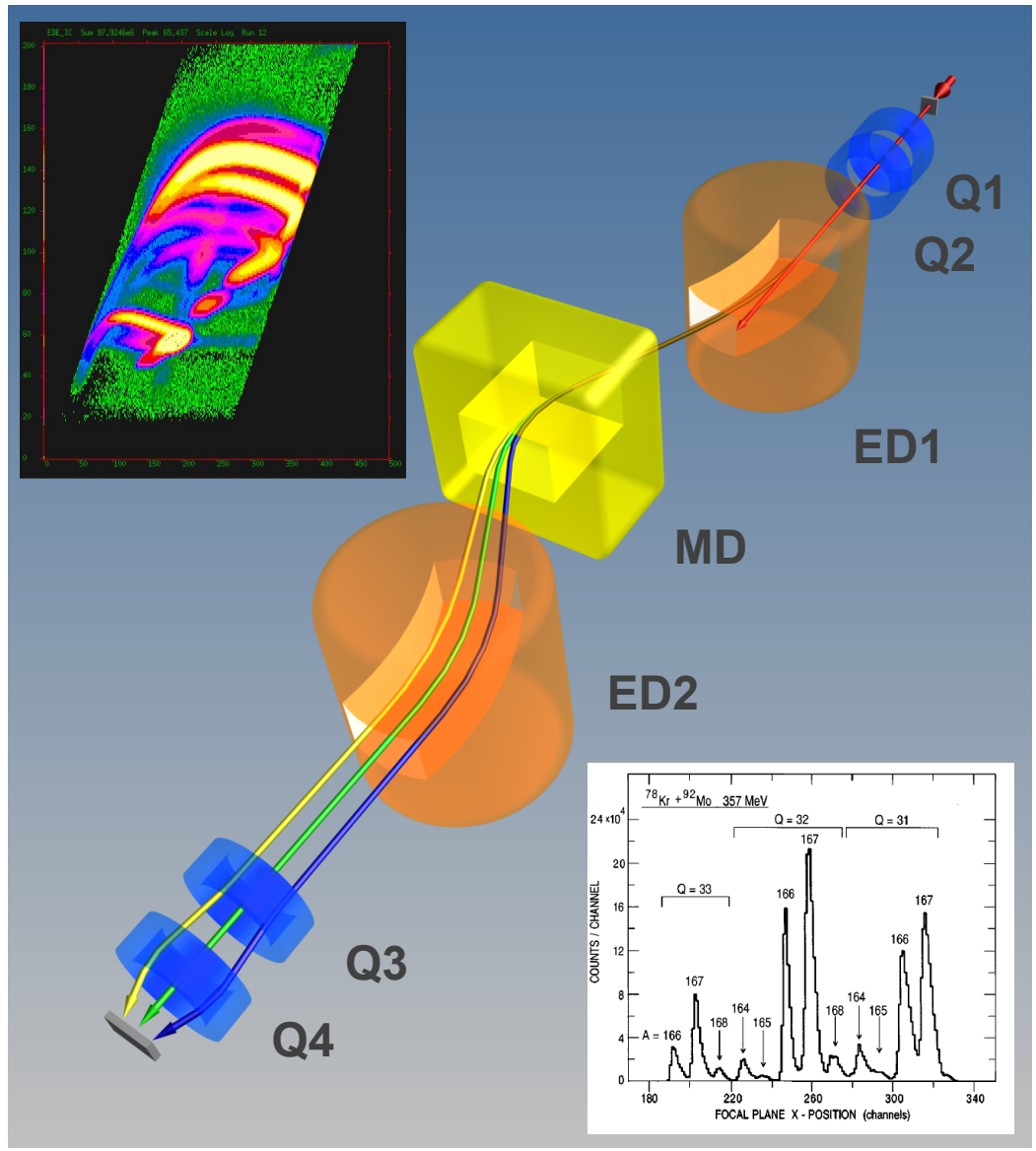

FMA Implantation-Decay Station

high event rates (1 MHz) , fast decay events (10 ns)

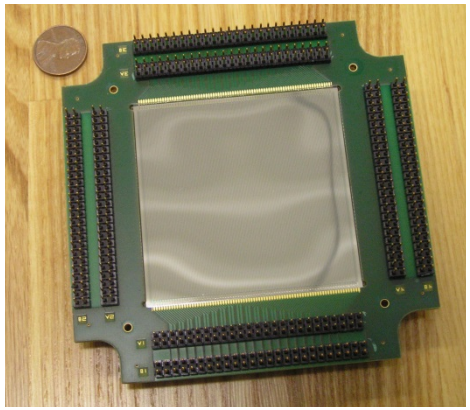

160X160, 64mmX64mm DSSD

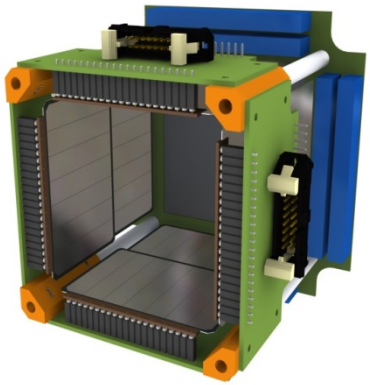

Si tunnel 8 7-strip SSSD's

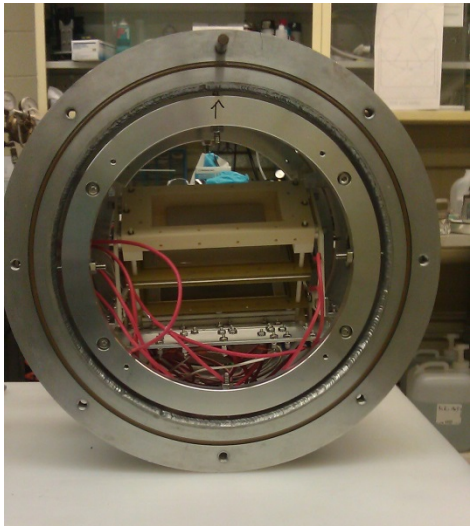

Large-area micro-channel plate – fast signals

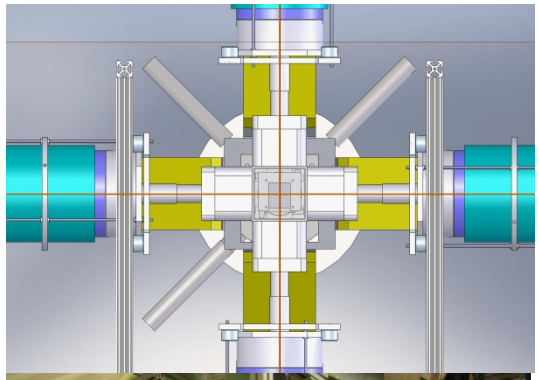

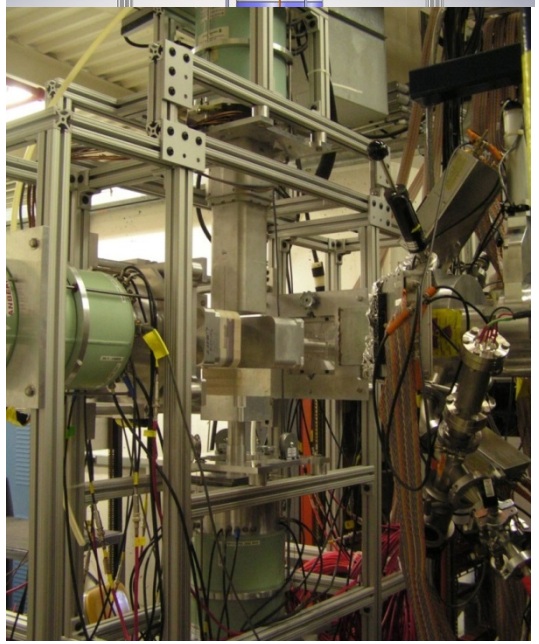

X-Array, 5 clovers in box geometry

FMA Digital DAQ
based on GRETINA DAQ parallel to DGS

- DSSD (320 chans)
- Si tunnel (56 chans)
- X-array (20 chans)
- focal plane (4 chans)
- 10 μs traces
- 100 kHz/DSSD possible
- NEW FIRMWARE

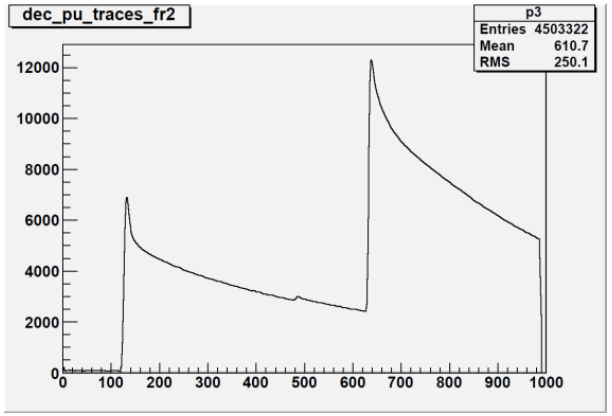

^{254}Rf implant-EC-sf trace

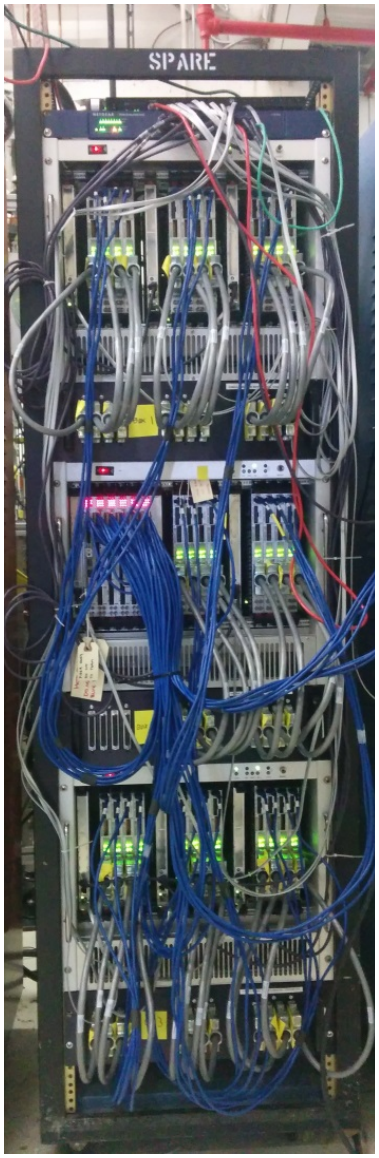

100 MHz, 14-bit Digitizer

M. Cromaz et al., A 597 (2008) 233–237

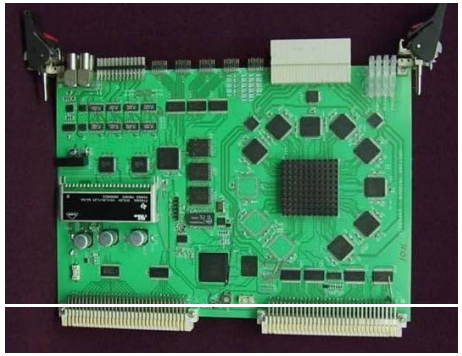

Trigger and Time control module

J.T. Anderson et al., 2007, IEEE Nuclear Science Symposium Conference Record, p. 1751

FMA digital DAQ

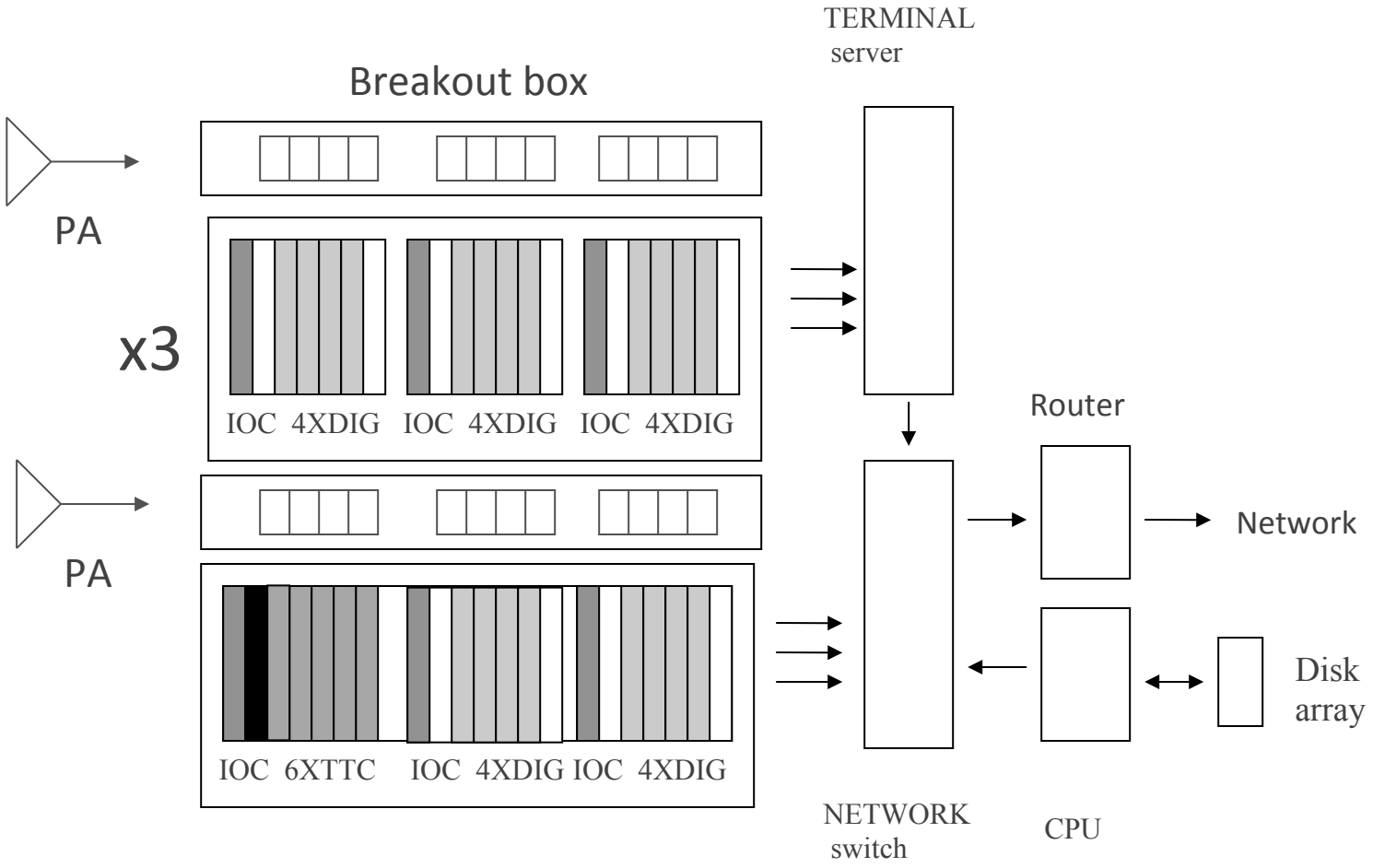

1 MTM+5TR(8 digs each)

Breakout box – signal conditioning

Phil Wilt

- Splits signal (to analog DAQ if required)
- Transforms signal from single ended to differential
- Offset adjustment
- Gain adjustment: x1, x2, x5, x10, variable
- Attenuation adjustment: 10%, 20%, 30%, variable
- Signal polarity: normal/inverted

DFMA alone
used in several experiments

- High event rates
  - Up to 100 kHz
- Data rates (< 10 MBy/s/IOC)
  - Up to 20 TBy total
  - 3 Mevents/s w/o traces
  - 50 kevents/s with traces
  - Multiple 2-TB USB disks
- Various trigger modes
  - Internal
  - External
  - SUMX, SUMY, X&Y
- Pileup events – Fast decay events
  - PU save mode
  - Digital "recovery" time
    - 50 μs in the original firmware
    - 1μs - new firmware
  - Trace extension (various extension modes)
  - Longer traces, trace decimator
  - Delayed coincidences ("isomer trigger")
- guest appearance at BGS
  - Portable
  - Self-contained
  - Remote access

DFMA+DGS
used in several experiments

- Two independent systems
- Bi-directional SERDES link
  - clock synchronization
  - trigger exchange (not only trigger timestamp but also trigger type, other info possible)
  - optical link
- Trigger (DFMA – monarch)
  - DFMA = DSSD front && back
  - DGS triggered by DFMA
  - Tested up to 1 MHz offline

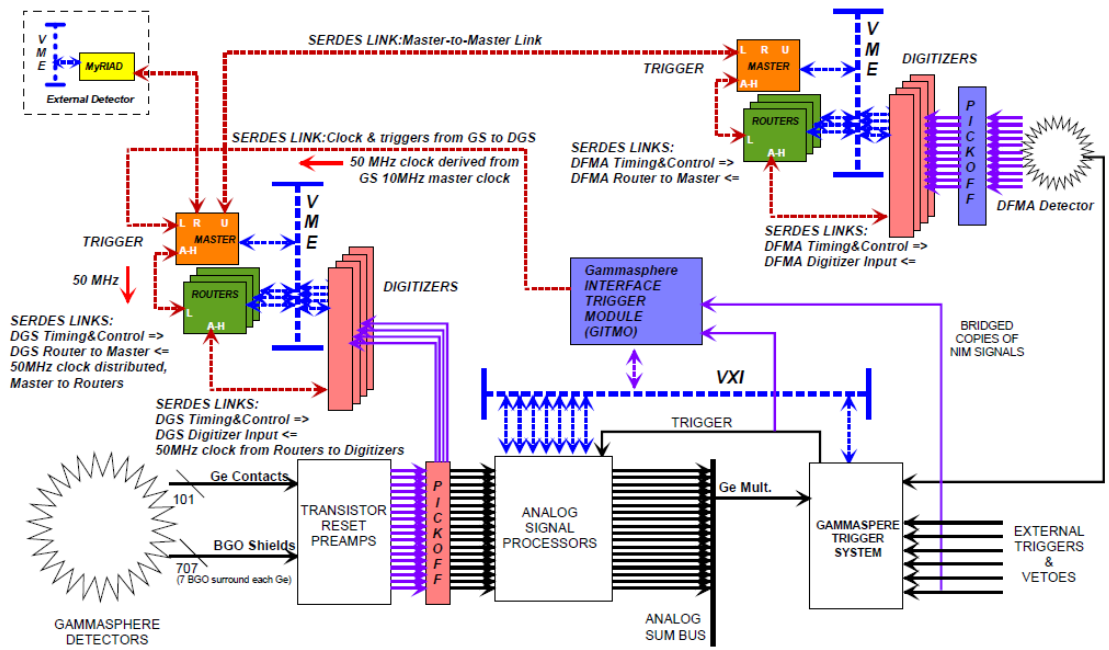

Figure 5: Overview of the DGS/DFMA system.

Thank you for your attention

Digitizer

M. Cromaz et al., A 597 (2008) 233–237

TTC module (Trigger Timing and Control)

J.T. Anderson et al., 2007
IEEE Nuclear Science
Symposium Conference Record, p. 1751

Digitizer properties

- 100 MHz clock
- 14-bit flash ADC (16 k)
- 10 μs long trace
- Input range: from -1V to +1V

Firmware

- Trapezoidal filter - energy
- LE filter – trigger and time
- CFD filter – time
- PZ correction
- Baseline restoration
- Variable parameters

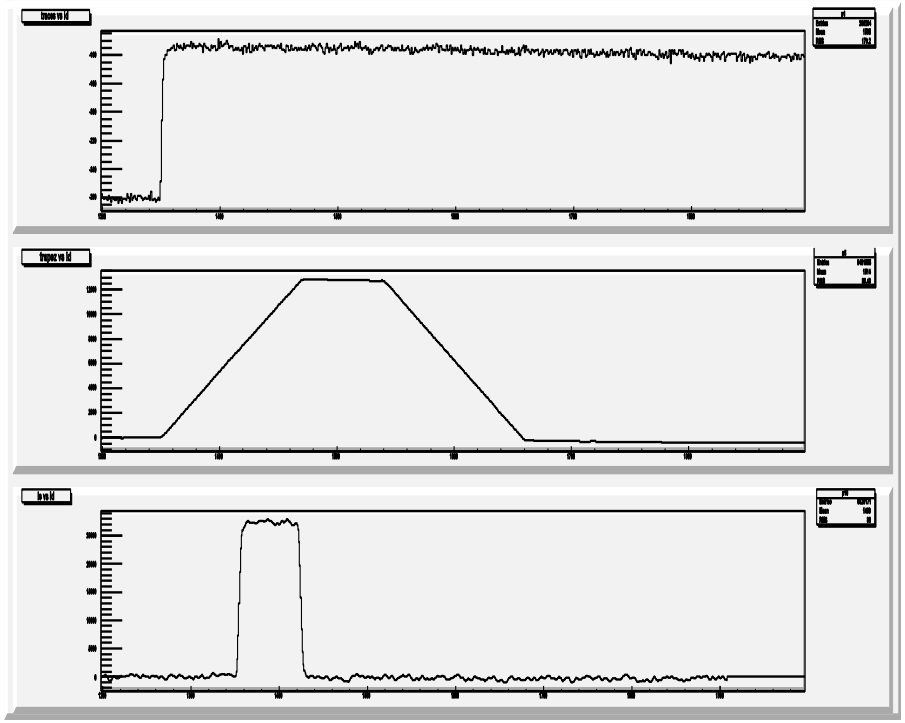

With low(er) trigger rate applications
one can store traces and apply filters offline