ASICS from the Wash. U & SIUE collaboration

Washington University in St. Louis

SIU
SOUTHERN ILLINOIS UNIVERSITY EDWARDSVILLE

HINP-16 and **PSD-8c**

For Si-strip detectors for scintillators

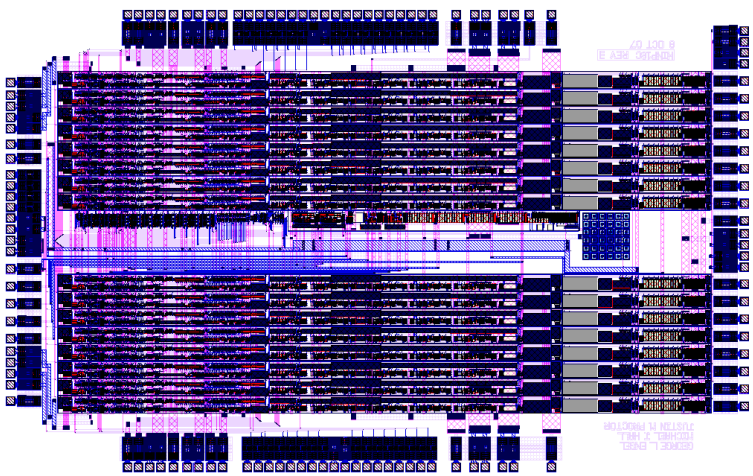

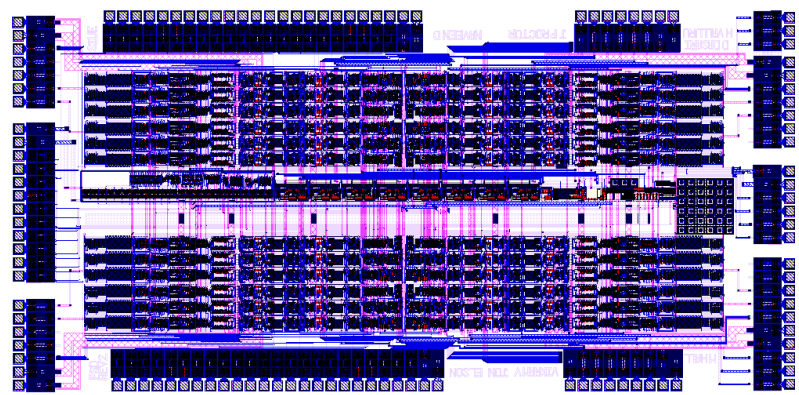

(Both configured for 32-channel operation, but only implemented 16(8) to save $'s.)

July 2015

Present usage

Institution	Device	~ # of channels
HINP		
MSU-WU	HiRA Array	~ 2000
ORNL-RUTGERS	ORUBBA	~ 2000
LSU-FSU	ANASEN	~ 1000 (?)
RIKEN	??	~ 1000
ND	??	~ hundreds
TAMU/Romania	??	~ 1000

5 technical & > 20 science papers have been published about & using HINP-16C.

PSD		
LANL	pointer survey meter	16*
WU	Scint Wall (DGS)	256 → 512
FSU (perhaps)		

3 technical papers

* Perhaps coming to some "first-responders" near you.

In service HINP-16C

G.L. Engel, M. Sadasivam, M. Nethi, J.M. Elson, L.G. Sobotka, R.J. Charity
A Multi-Channel Integrated Circuit for Use in Low-and Intermediate-Energy Nuclear Physics - HINP16C,
Nucl. Instru. Meth. A, 573, 418-426 (2007).

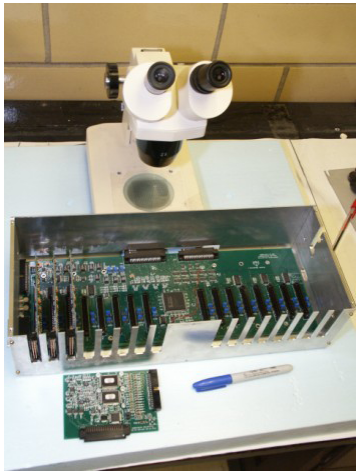

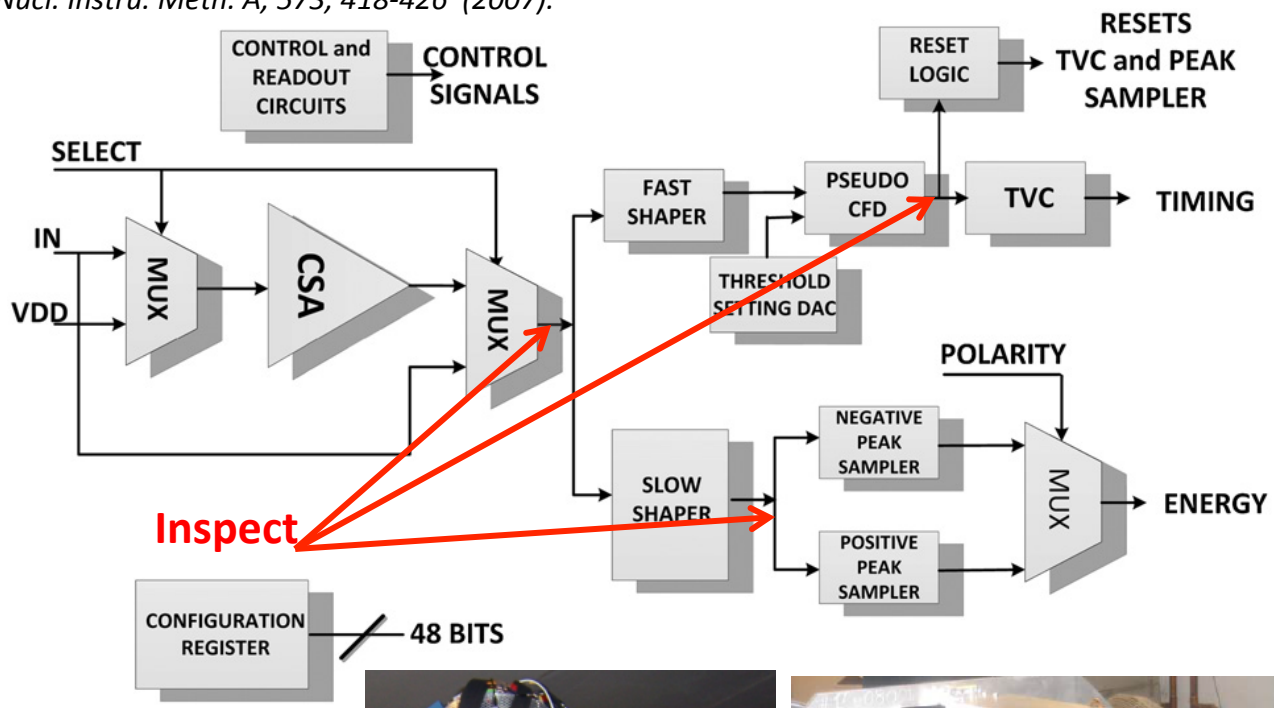

1. Two internal (*selectable*) CSA's
   (80 and 300-MeV ranges)
1. External CSA option
2. TCV (500 and 1000 ns options)
3. 32 ch/Chip Board/512 ch/Mother Board
4. Analog E and T streams pipelined into ADC (XLM-XXV)

Small system
~ 500 ch

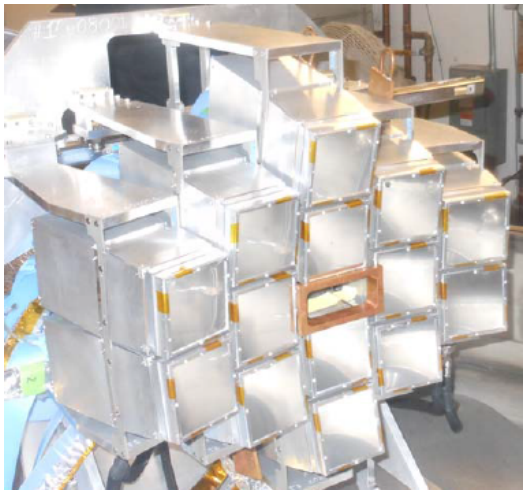

large system
~ 2000 ch

In service PSD-8C

G.L. Engel, M.J. Hall, J.M. Proctor, J.M. Elson, L.G. Sobotka, R. Shane, R.J. Charity, Design and Performance of a Multi- Channel, Multi-Sampling, PSD-Enabling Integrated Circuit, *Nucl. Instru. Meth. A, 612, 161-170 (2009)*

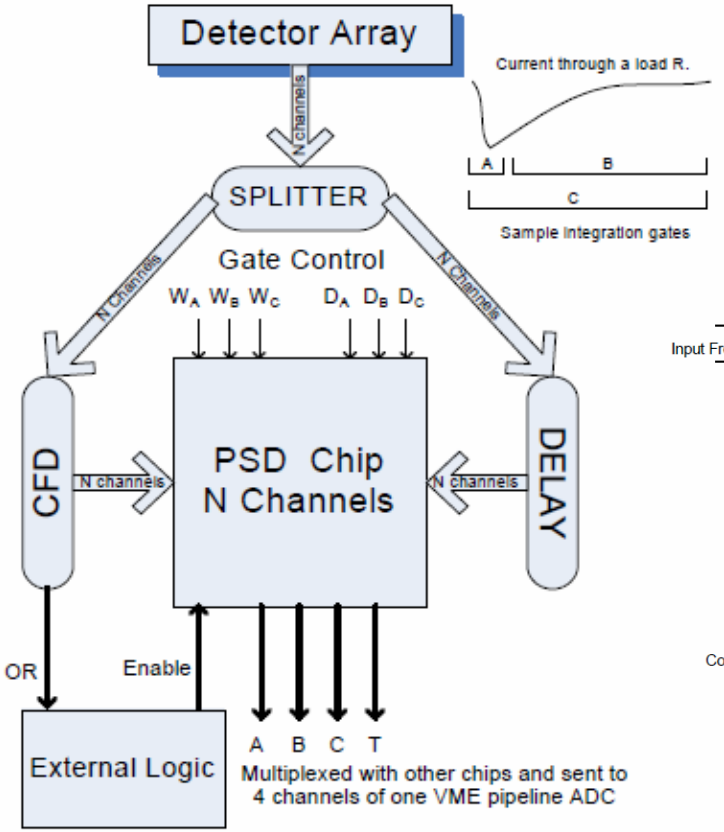

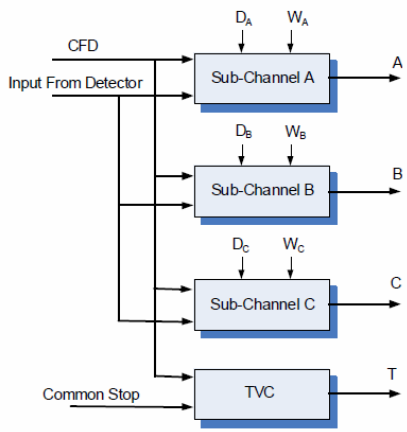

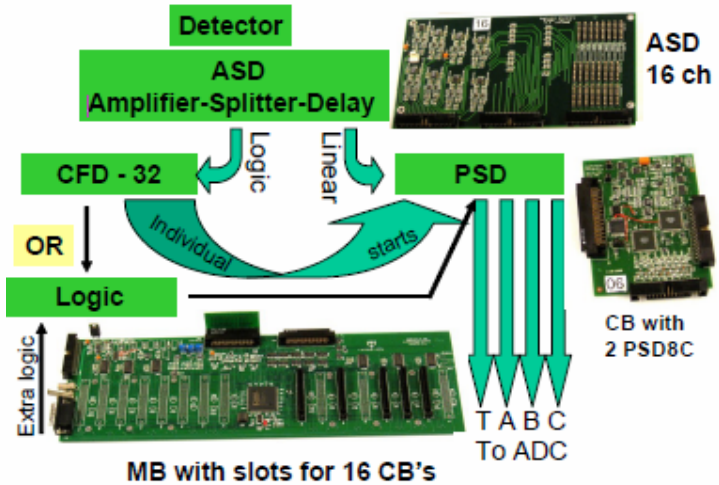

1. External CFD (32-ch CFD designed at WU – CAMAC)
2. Three integration regions (A,B, and C) start and width user controlled
3. TVC circuit
4. Analog A, B, C (integrators) and T streams piped to **On CB ADC's**.
5. One VME XLM-XXV ➔ 256 channels

PSD -8C performance

Single gate on various scintillators

^{22}Na

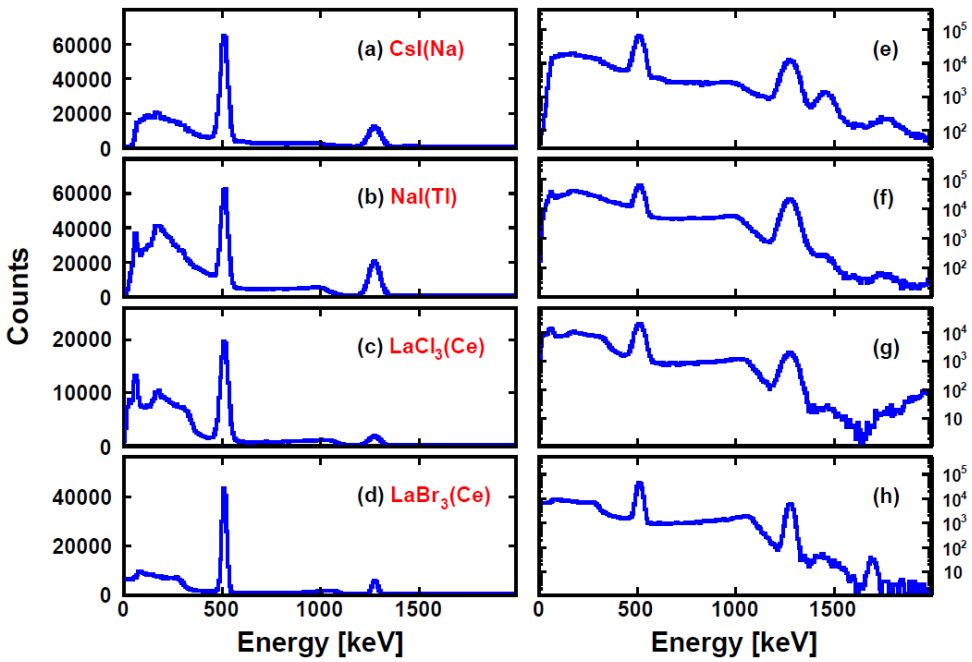

BC-501

^{252}Cf

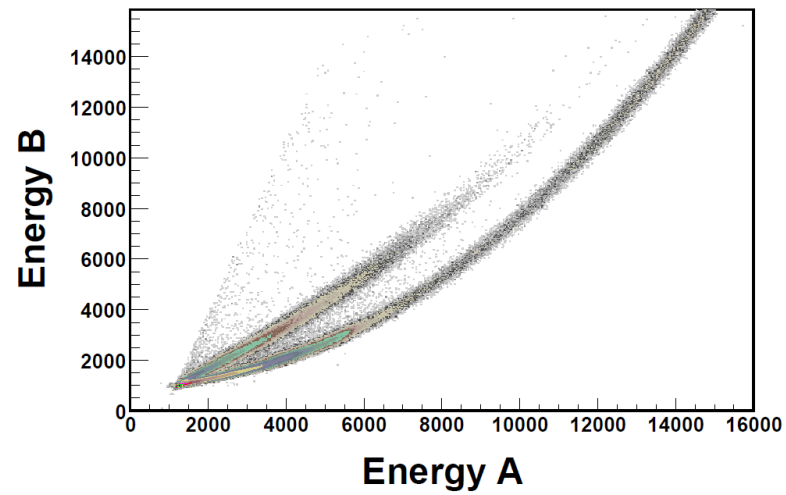

Two tech. papers + two projects in the works.

One of these is a DTRA (LANL) project using **CLYC**

New HINP4 Progress Report

OBJECT: **Extend range and reduce thresholds present HINP design**

CHANGES: New Charge amp, dual (live) shapers,
New peak detectors (CDS from BNL design),
CFD has 10x added to LE,
Differential off chip, ADC's on CB (250 MHz dig ALL – high, low, time - parallel)
E_{high} (100 MeV), E_{low} , (400 MeV), T (2 or 4 us options) streams
digitized in parallel on CB ➔ XLM-XXV
Each XLM ➔ 1000 ch (2000 ch if make 32-ch chip)

Two simultaneous gain ranges: ~100 and ~400 MeV
linear to ~ 75 % of ranges then compressive ➔ go to HIGHER than nominal range

Thresholds: ~ 250 keV [measured]

Resolution: ~ 30 keV (high gain) ~ 60 keV (low gain) [simulated]

Down side: This version does ***not*** allow the user to use an external CSA.

Errors on HINP-4.

1. Logical - Required FPGA gymnastics to properly down loading. (Seems to work – phuu !)
   ➔ downloading slow (will be a few s/512 ch)
   ➔ Could influence time resolution on +ve polarity
2. We think a component in the peak sensor is undersized making some channels compressive.

Energy Branch Block Diagram (much is new)

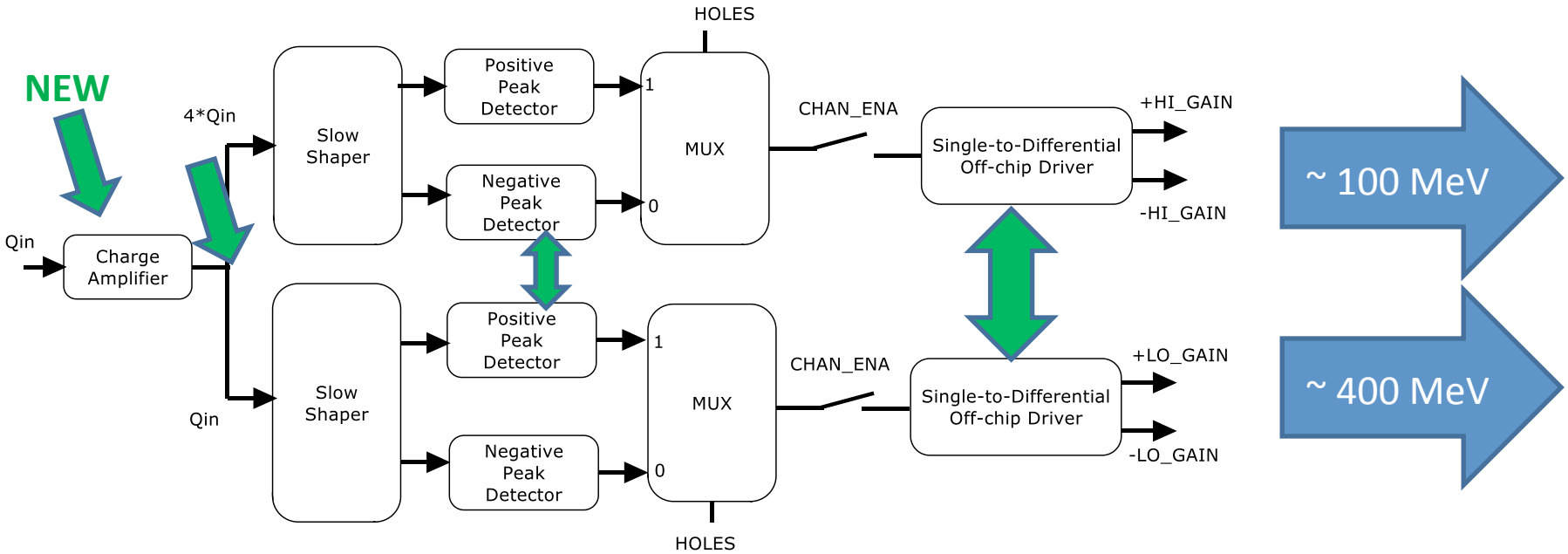

CFD Block Diagram

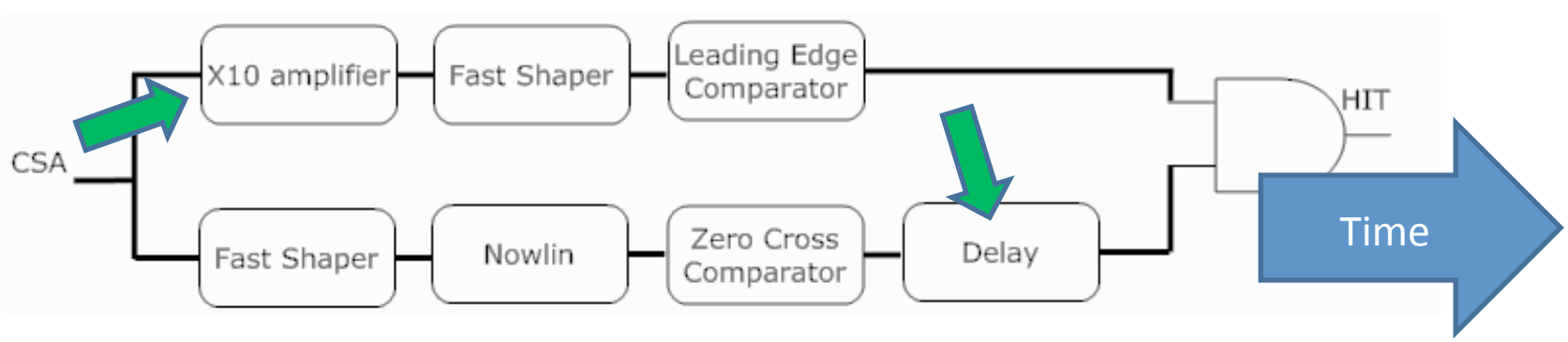

CSA signal comes from first op amp in the slow shaper of the high-gain branch.
Digital delay block in zero-cross leg compensates for delay through x10 amplifier.

Linearity with Silicon (MSC-S2) attached

High-gain
~ 6.5 keV/ch
linear to ~ 12000 ch ➔ ~ 80 keV
compressive to ~ 140 MeV

Low-gain
factor of 4 larger range

PROBLEM
For reasons not yet determined, some channels are slightly compressive.

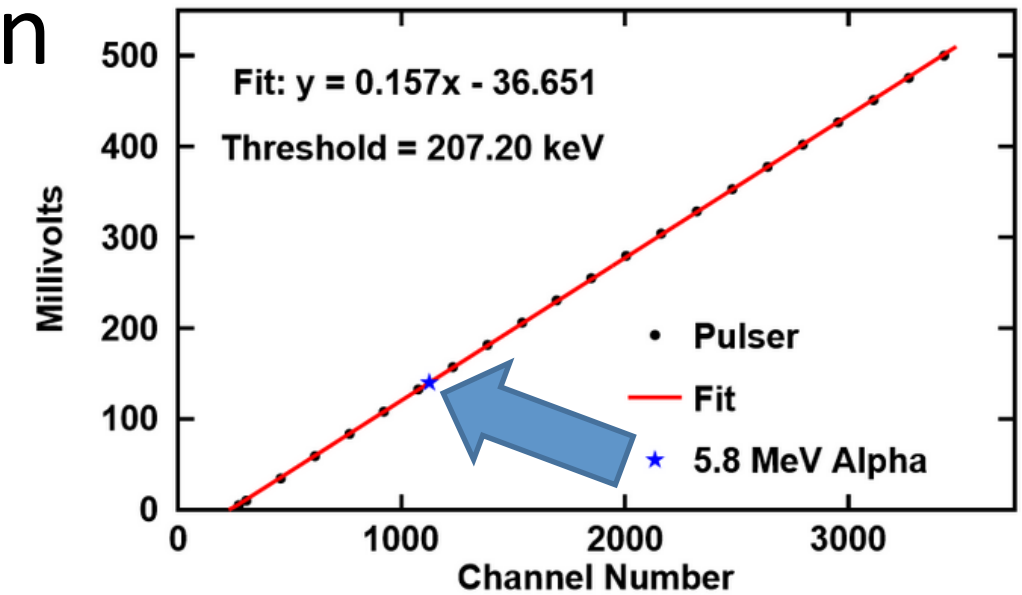

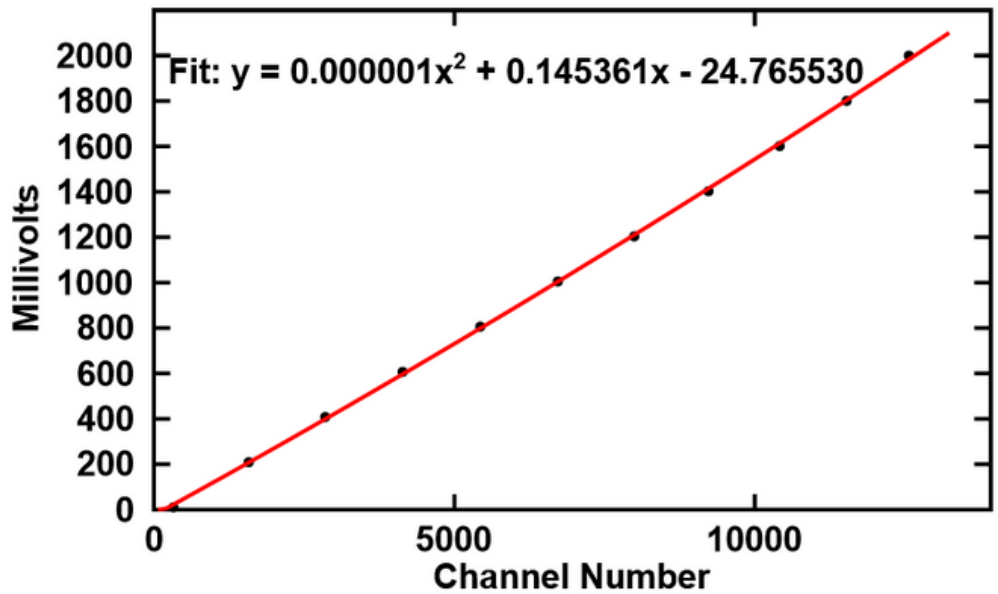

Future

ACQ: All working with existing NSCL DAQ.
No problems anticipated.
Have run at: NSCL, TAMU, ANL, ORNL, FSU, ND, & HIMAC

1. Help anyone who wants to use this technology.
2. Use HINP-4 in new set of experiments.
   (Two planned at TAMU + 1 at NSCL, …… > RIKEN)
3. Improve on HINP-4 (➔HINP-5 ?) to
   a. Add external CSA functionality
   b. Finally make 32-ch version if $'s allow
   c. Fix the error & improve linearity

COST - $: Chip run ~ 25 k$ ➔ ASIC ~ $ 10 /ch
System $ 50-100/ch Internal CSA ➔ $100-200/ch external CSA
COST – time: 4 years to design a new chip
1 year to fully understand and debug
Thus major revision cycle time ~ 5 years.
Even minor revisions take > 1 year.

Thanks ….lgs

Energy Resolution (Simulation)

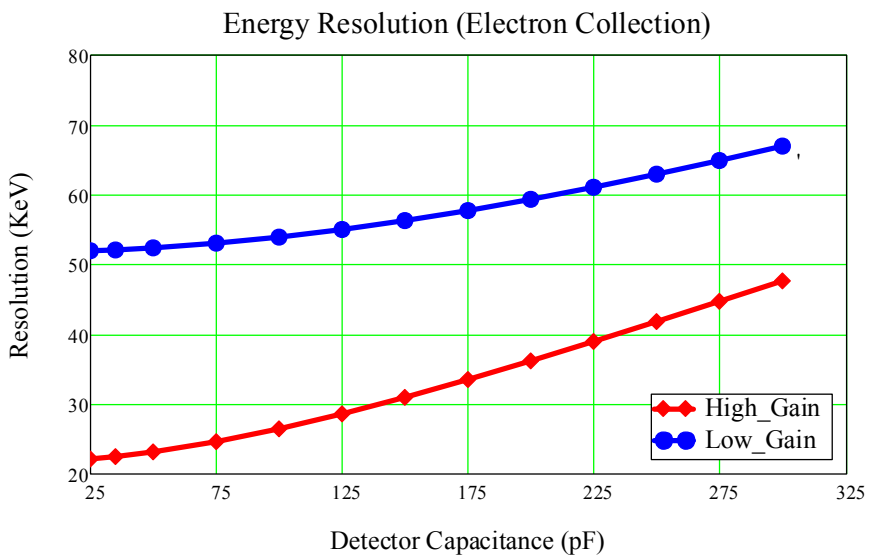

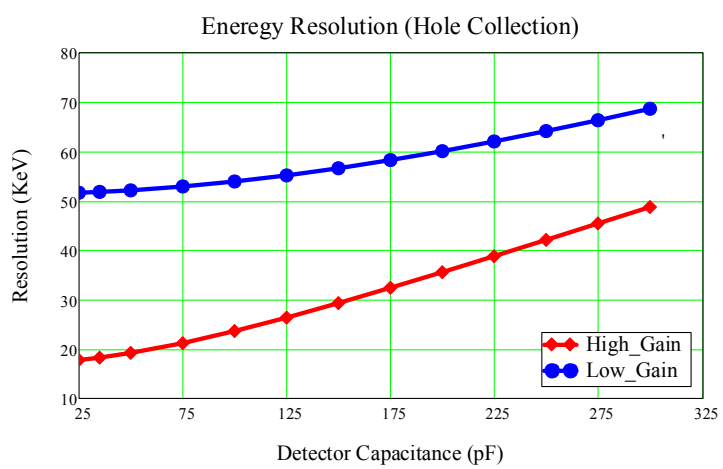

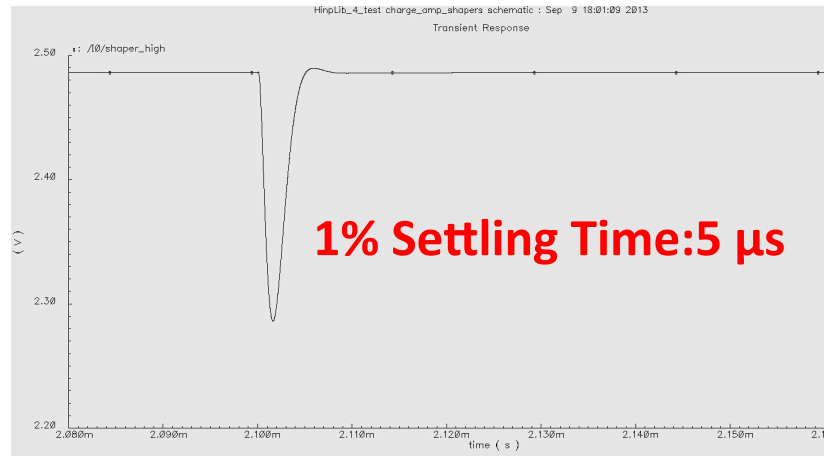

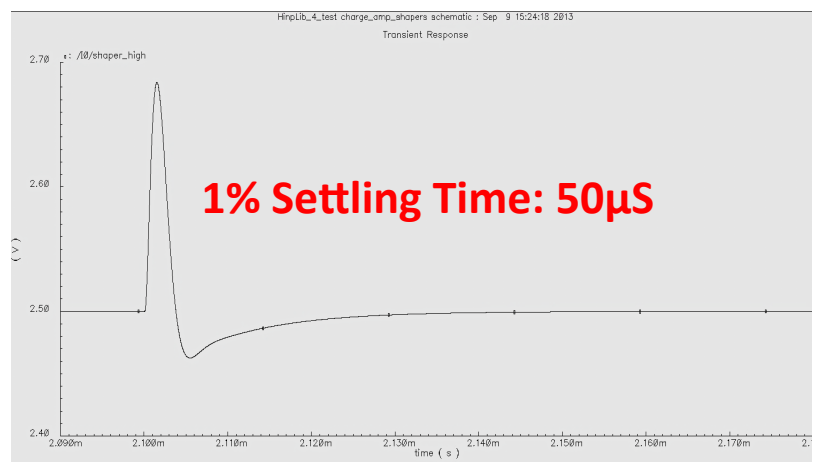

Minimum Trigger Level of CFD

Minimum trigger level set so that threshold is 6 times the RMS noise level at input to leading-edge circuit and LE signal must fire before ZC signal.

Detector Capacitance	Minumum Trigger Level (Electron Collection)	Minumum Trigger Level (Hole Collection)
25 pF	125 keV	115 keV
75 pF	190 keV	180 keV
150 pF	350 keV	340 keV
300 pF	730 keV	690 keV

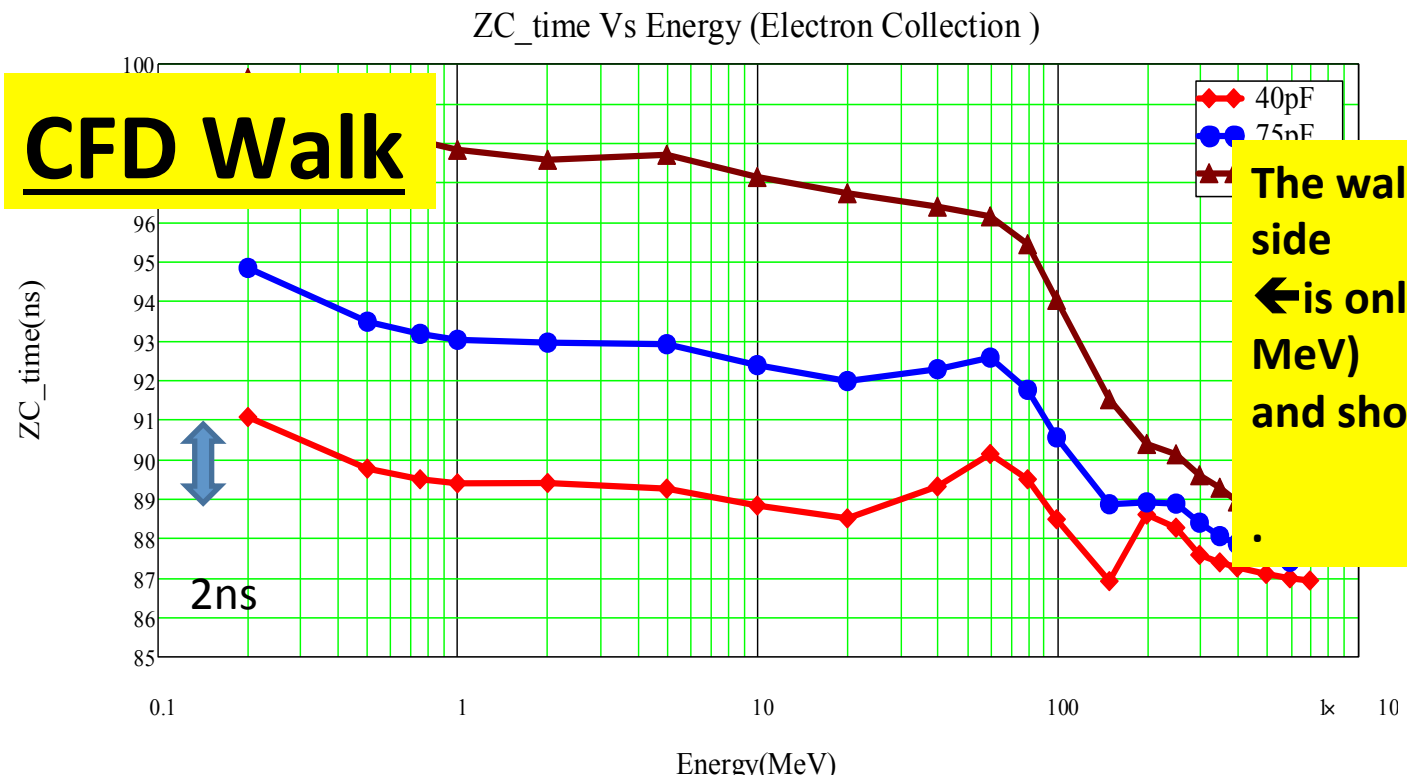

The walk for the ELECTRON side
←is only a few ns (< 100 MeV)
and should be Calibratable.

.

I. Physics overview

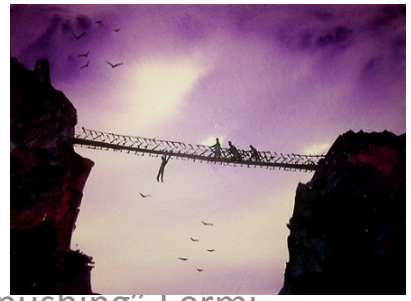

1. Multiple proton decay at the drip-line & continuum nuclear structure
2. Improve/complete isospin multiplets
3. **ASPIRATION**: to peer in at nucleon-nucleon correlations (in the medium) by "pushing" Fermi surface to (or into) the continuum.
4. Understanding how to treat 3-body Coulomb problem (paper submitted on this).

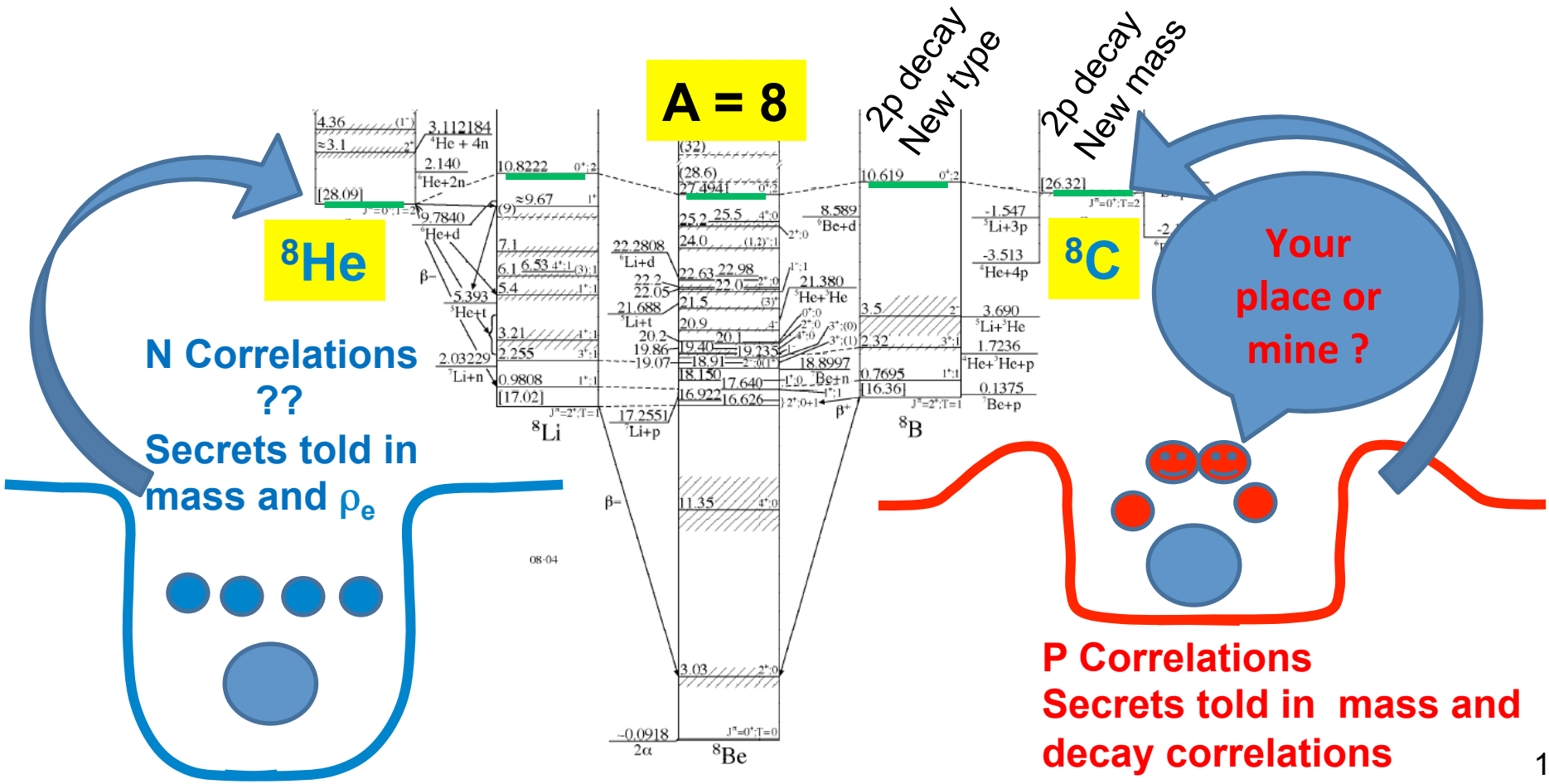

Issue: dynamic range, p triggering , keeping HI on scale

Z	Ion	100 MeV*A 300 um	100 MeV*A 500 um	250 MeV*A 300 um	250 MeV*A 500 um
1	p	0.404 YES	0.647 YES	0.250 ~ YES	0.418 YES
6	^{12}C	14.6	23.3	7.9	13.2
8	^{16}O	26.1	43.6	14.1	23.5
10	^{20}Ne	40.9	68.5	22.1	36.9
14	^{28}Si	80.5	134.4	43.6	72.8
18	^{40}Ar	133.	222.	72.1	120.
20	^{40}Ca	164.	274.	89.4	149.
26	^{56}Fe	277.	462.	152.	254.
30	^{64}Zn	368.	614	202.	337.
36	^{86}Kr	526.	878.	292.	488.
40	^{90}Zr	645.	1077.	361	602
50	^{100}Sn	991.	1655.	565	943

← Trigger With HINP4

Could be Done with HINP4 Without external CSA

MUST use HINP-3

For reference: 300 um → 0.35 pf/mm2 → 35 pf 500 um → 0.22 pf/mm2 → 22 pf
PCB + cables + CB + 15- 20 pf → 55 pf → 45 pf

Technology and light-nuclei continuum spectroscopy papers using HiRA (mostly) + HINP (always)

Technology:	G. L. Engel et al., NIM **A 573**, 418 (2007).	HINP
	M. S. Wallace et al., NIM **A 583**, 302 (2007)	HIRA
	G. L. Engel et al., NIM **A 612**, 161 (2009).	PSD improvements ported to HINP
	G. L. Engel et al., NIM **A 652,** 462 (2011).	HINP + PSD
A = 5 ➔ ^{5}H and ^{5}Be	Charity et al., Wuosmaa et al., In preparation (2015)	
^{6}Be:	L.V. Grigorenko et al., Phys. Rev. C **80**, 034602 (2009).	
	L.V. Grigorenko et al., **Phys. Lett.** B **677**, 30 (2009).	
	I.A. Egorva et al., **Phys. Rev. Lett.** In press (2012).	
^{8}C and ^{8}B$_{IAS}$: + misc	R. J. Charity et al., Phys. Rev. C **82**, 041304(**R**) (2010).	
	R. J. Charity et al., Phys. Rev. C **84**, 014320 (2011).	
	K. W. Brown et al., Phys. Rev. C **90**, 027304 (2014).	
^{10}C:	R. J. Charity et al., Phys. Rev. C **75**, 051304(**R**) (2007).	
	K. Mercurio et al., Phys. Rev. C **78**, 031602(**R**) (2008).	
	R. J. Charity et al., Phys. Rev. C **80**, 024306 (2009).	
T = 5/2➔^{11}Li,^{11}Be**,^{11}B**	R.J. Charity, et al., Phys. Rev. C **86**, 041307 (**R**) (2012).	
^{12}C (Hoyle)	J. Manfredi et al., Phys. Rev. C **85,** 037603 (2012).	
^{12}O + ^{12}N$_{IAS}$	M. Jager et al., Phys. Rev. C **86**, 011304 **(R)** (2012).	
^{12}Be:	R. J. Charity et al., Phys. Rev. C **76**, 064313 (2007).	
^{13}O decay and ^{12}N (2-)	L. G. Sobotka et al., Phys. Rev. C **87**, 054329 (2013).	
^{16}Ne (3-body)	K. W. Brown et al., **Phys. Rev. Lett.** **113,** 2322501 (2014).	
(2+)	K. W. Brown et al., Phys. Rev. C under review (2015).	
Misc inc ^{9}Li$_{"IAS-AAS"}$:	R. J. Charity et al., Phys. Rev. C **78**, 054307 (2008).	
Spin flip spin alignment	R. J. Charity et al., Phys. Rev. C **91**, 024610 (2015).	
Isospin symmetry breaking:	R. J. Charity et al., Phys. Rev. C. **84**, 051308 (**R**) (2011).	
	K. W. Brown et al., Phys. Rev. C under review (2015).	