# Current and future HiRA data acquisition strategies

**HiRA Working Group**

Andrew M. Rogers

*University of Massachusetts Lowell*

*FRIB DAQ meeting (ANL) — 07/29/2015*

W.G. Lynch[1], L.G. Sobotka[2], R.J. Charity[2], Z. Chajecki[3], J. Elson[2], S. Hudan[4], J. Lee[5], R.T. de Souza[4], M.B. Tsang[1] and the HiRA collaboration

1. *NSCL, Michigan State University, East Lansing, MI, 48824 USA*
2. *Department of Chemistry, Washington University, St. Louis, MO 63130, USA*
3. *Department of Physics, WMU, Kalamazoo, MI, 49008, USA*
4. *IU Cyclotron Facility and Dept. of Chemistry, Bloomington, IN 47405, USA*
5. *Department of Physics, The University of Hong Kong, Pokfulam Road, Hong Kong*

# High Resolution Array (HiRA)

M.S. Wallace *et al.*, NIM A **583** (2007) 302–312

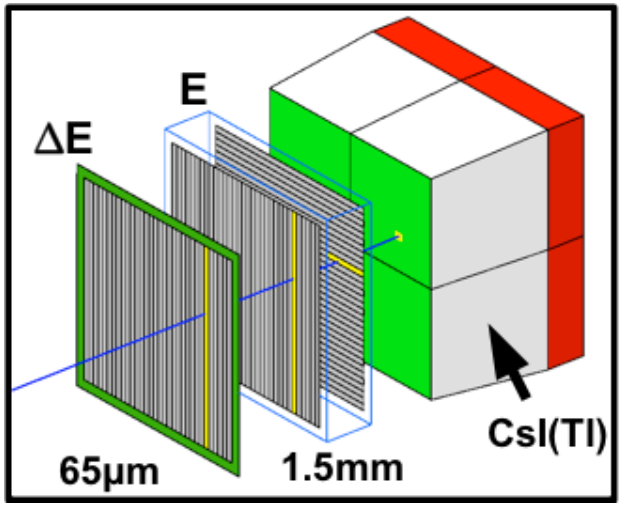


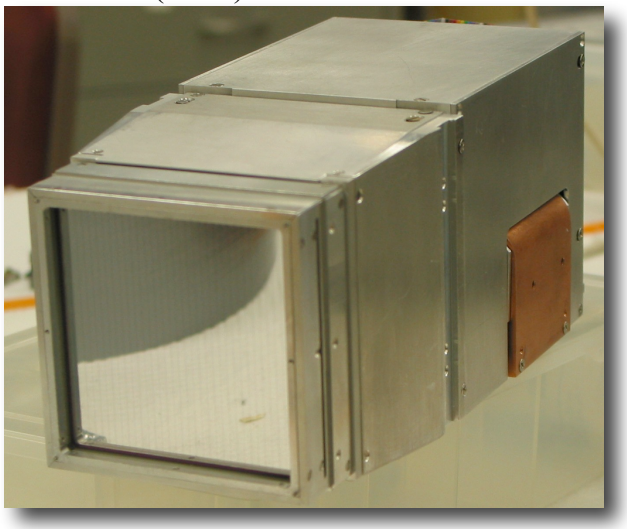

- Modular array of ~20 Δ*E*-*E* charged-particle telescopes
- 65-μm 32-strip SSSD
- 1.5-mm 32x32-strip DSSD
- Four ~4-cm thick CsI(Tl) crystals with photodiode readout
- Readout using WashU ASIC electronics (see L.G. Sobotka)

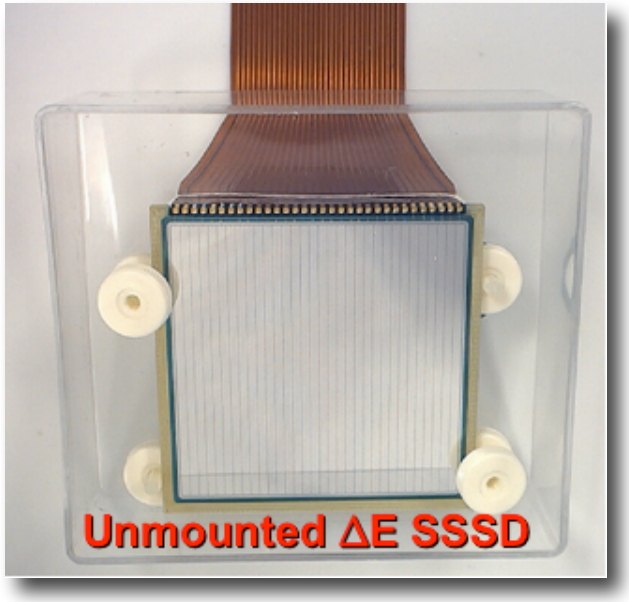


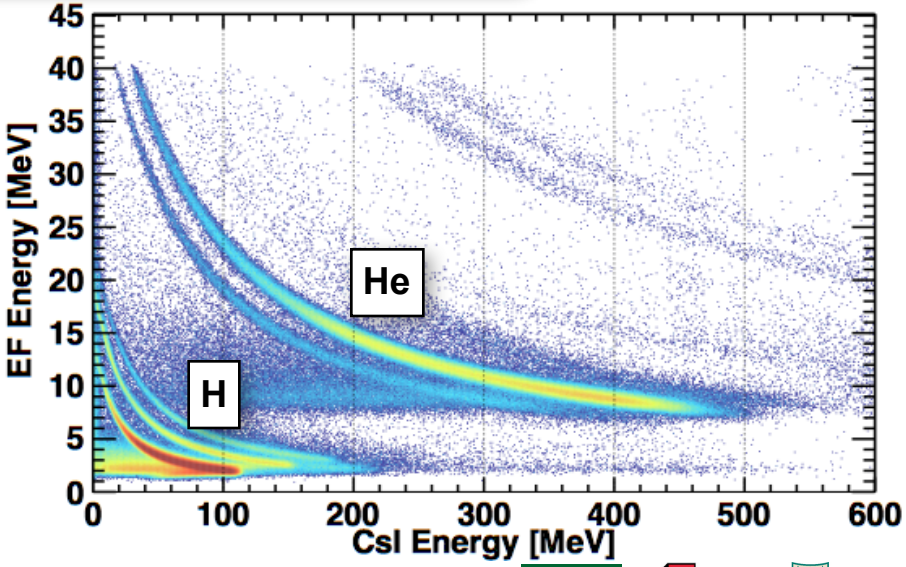

# High Resolution Array (HiRA)

M.S. Wallace *et al.*, NIM A **583** (2007) 302–312

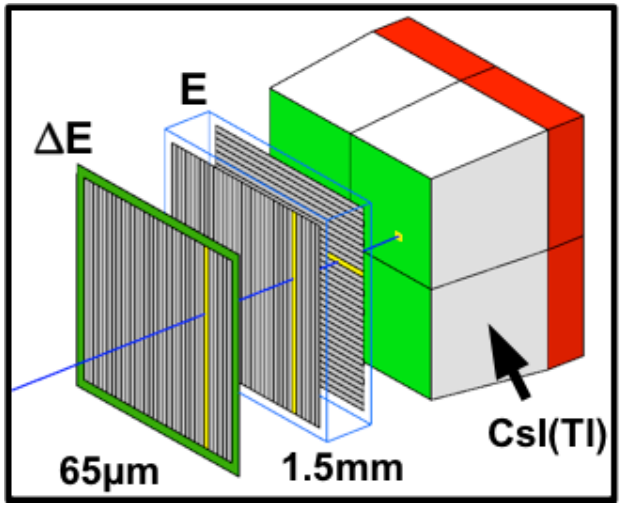


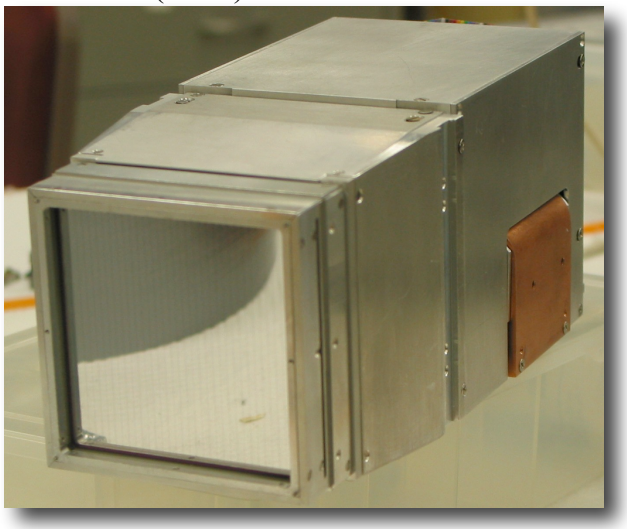

- Modular array of ~20 Δ*E*-*E* charged-particle telescopes
- 65-μm 32-strip SSSD
- 1.5-mm 32x32-strip DSSD
- Four ~4-cm thick CsI(Tl) crystals with photodiode readout
- Readout using WashU ASIC electronics (see L.G. Sobotka)

G.L. Engel *et al.* NIM A **573(3)** 2007

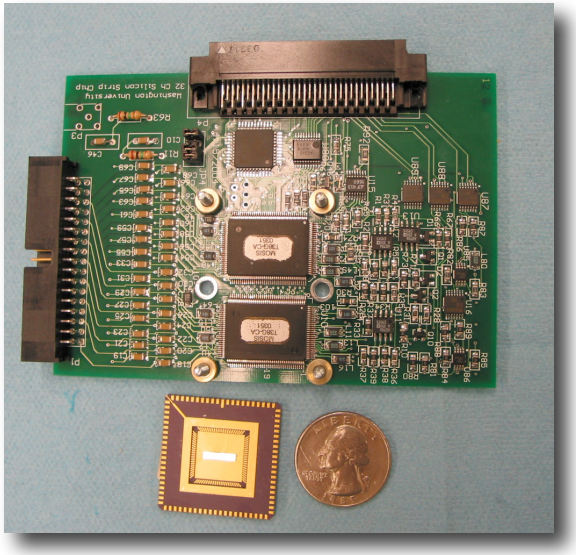

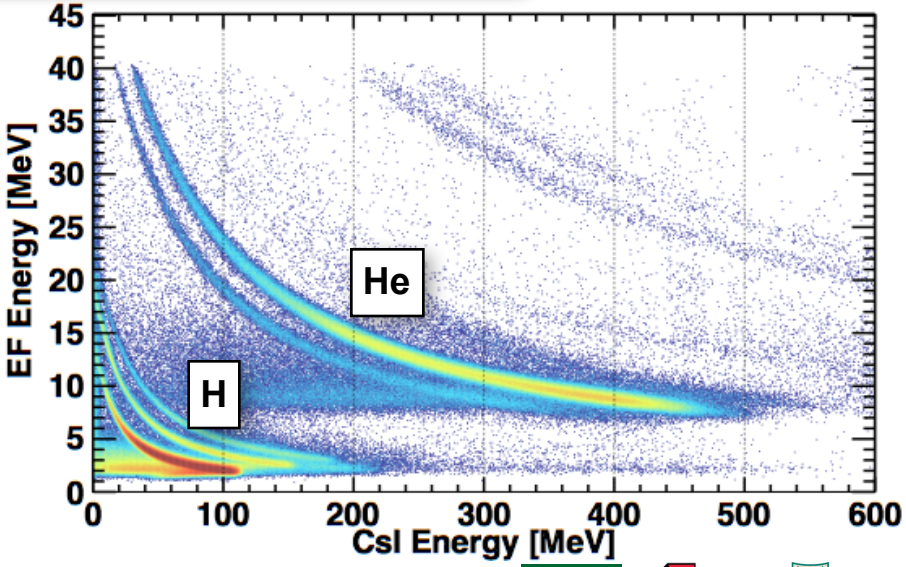

# High Resolution Array (HiRA)

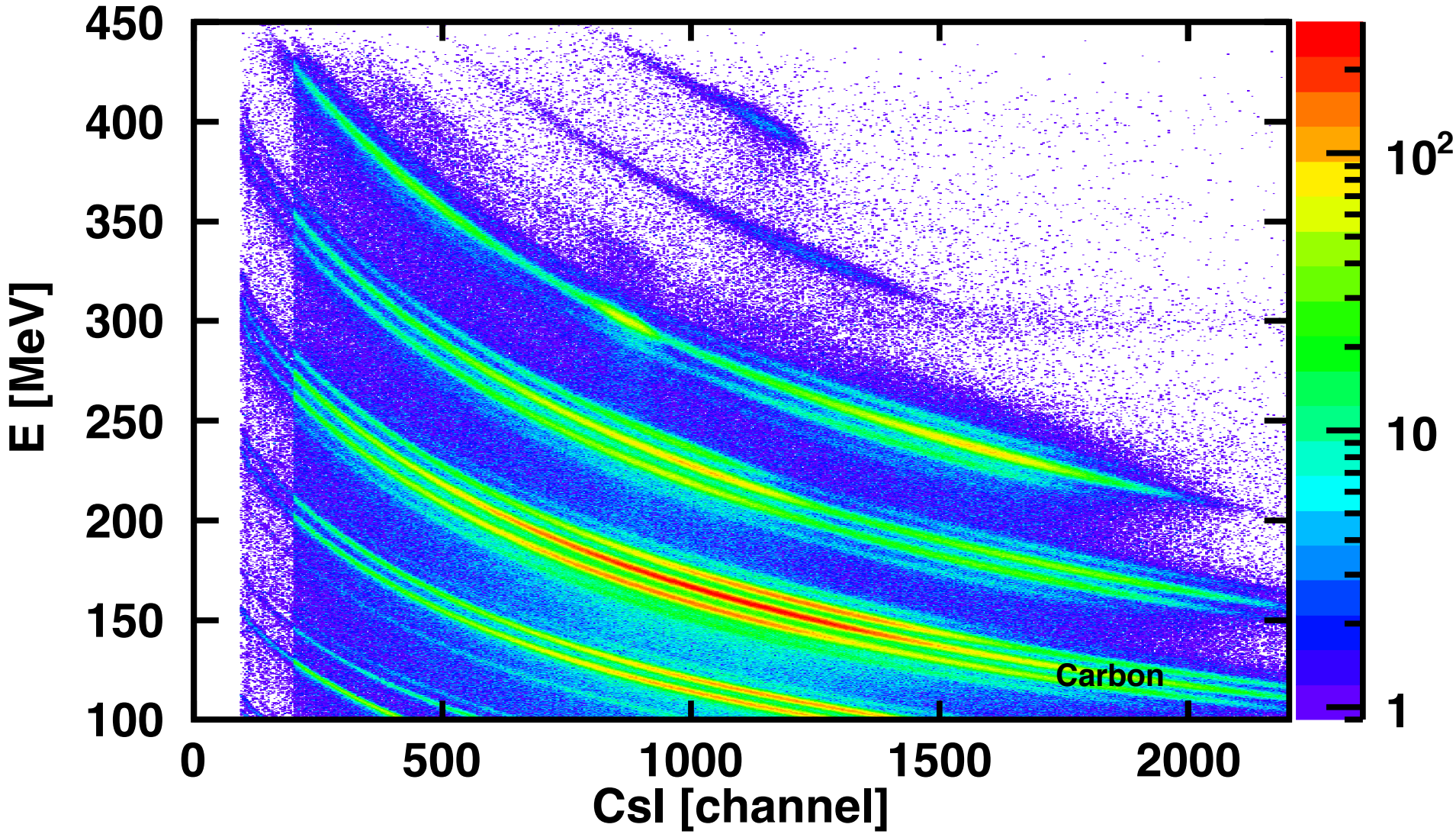

# Coupling to other devices

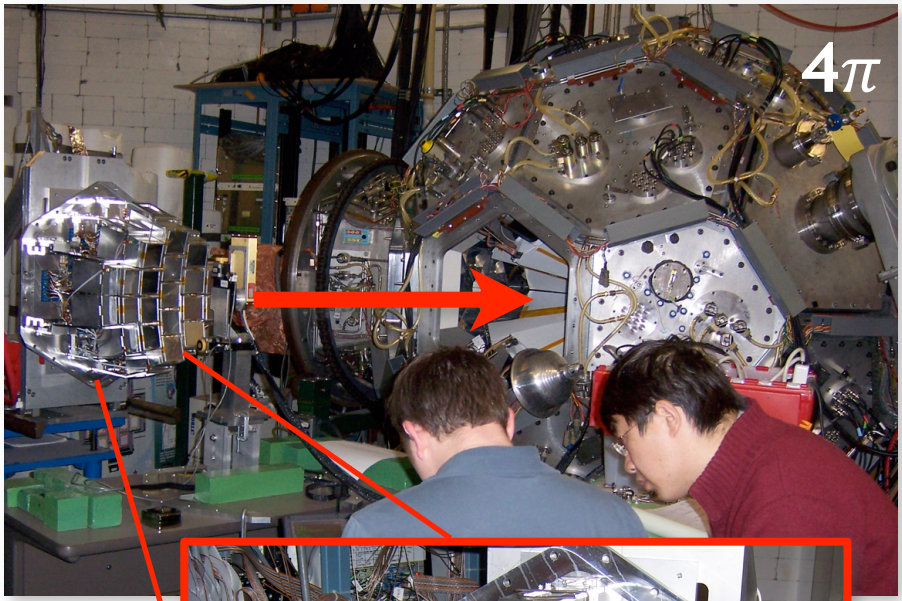


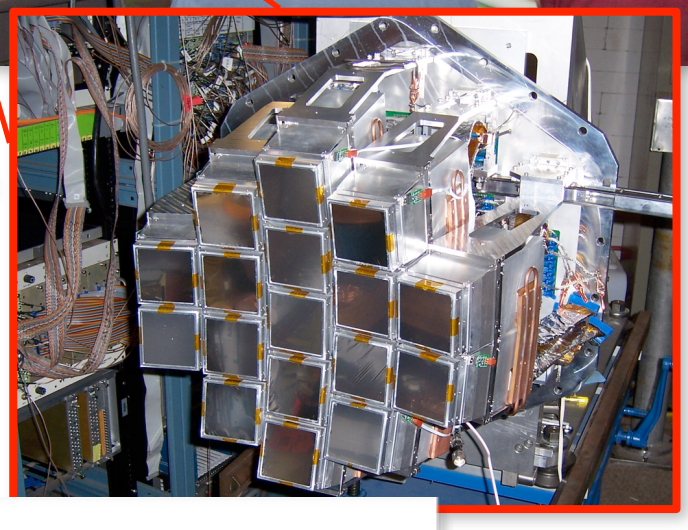

Nuclear EOS via two-particle correlation functions

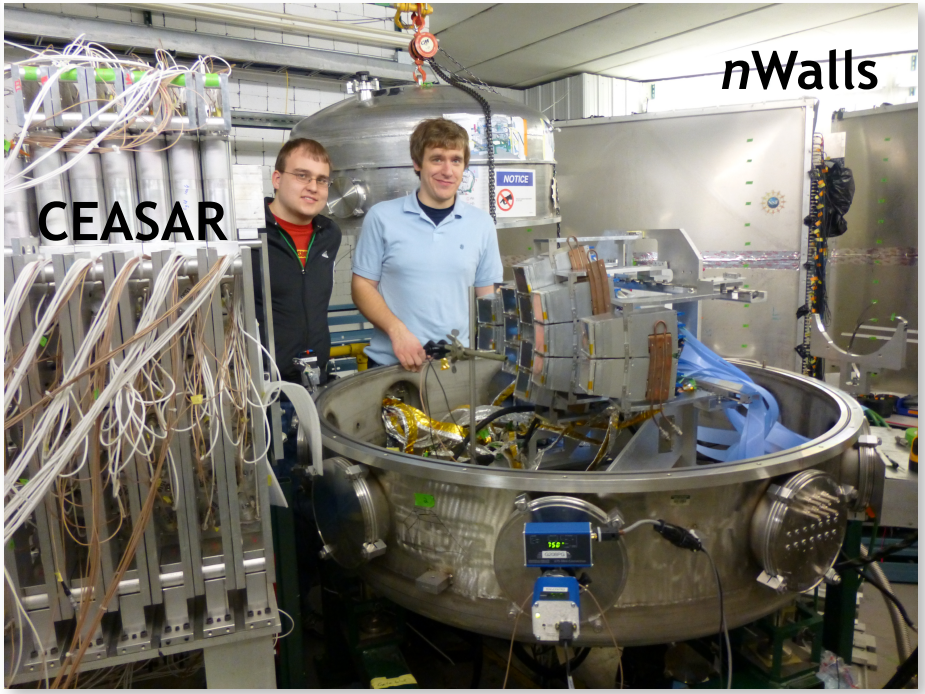


Resonance spectroscopy

# Coupling to other devices

- ~20 NSCL experiments and ***> 20 science publications***
- Typically limited by rates and timing of auxiliary detector systems.
- **<u>Coupling strategy</u>** — Multiple crates (past) and timestamps (present)

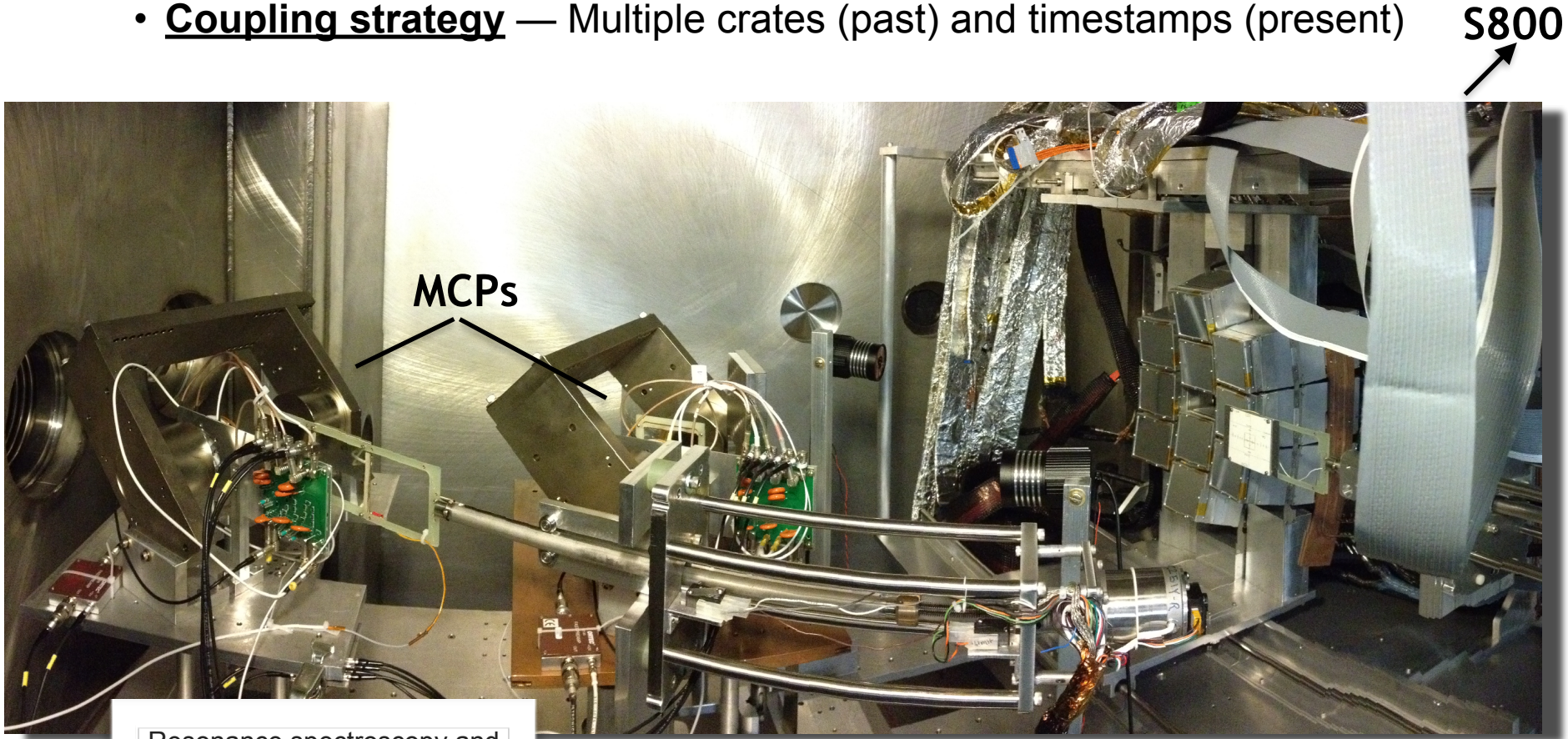


Resonance spectroscopy and transfer reactions

# HiRA data acquisition overview

| | |
|---|---|
| **Triggering strategy** | Singles trigger or slave |
| **Readout strategy** | NSCL DAQ 11.0 with event building<br>**VMUSB** - XLM/FADC, CAEN ADCs, TDCs, CAMAC |
| **Data and event rate** | Singles: few Hz - 5kHz, 0.25Mb/s - 25Mb/s*<br>Slave: (S800) ~ 200Hz master-trigger rate 0.5Mb/s |
| **Data volume** | typically 100s of Gb<br>Max. < 1 Tb (Dependent on secondary devices) |

- Strategy for coupling to other detectors DAQ systems involves constructing trigger logic using signals from secondary systems and correlating with a timestamp.
- Currently, timestamping using XLM module (D. Bazin)
- We have not investigated new strategies for merging controls information, although in the past we have incorporated data from a PLC.

# Trigger logic examples

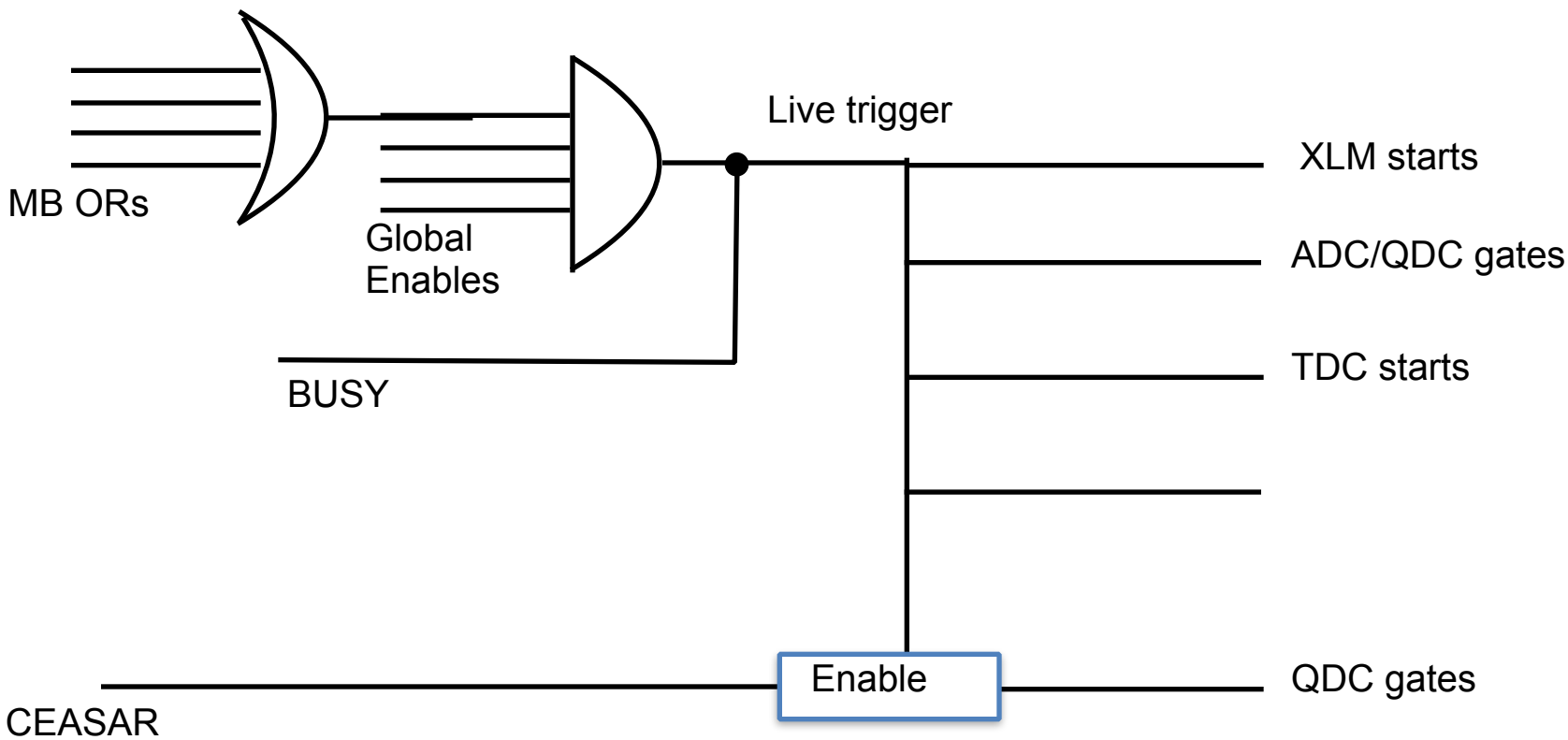

# Trigger logic examples

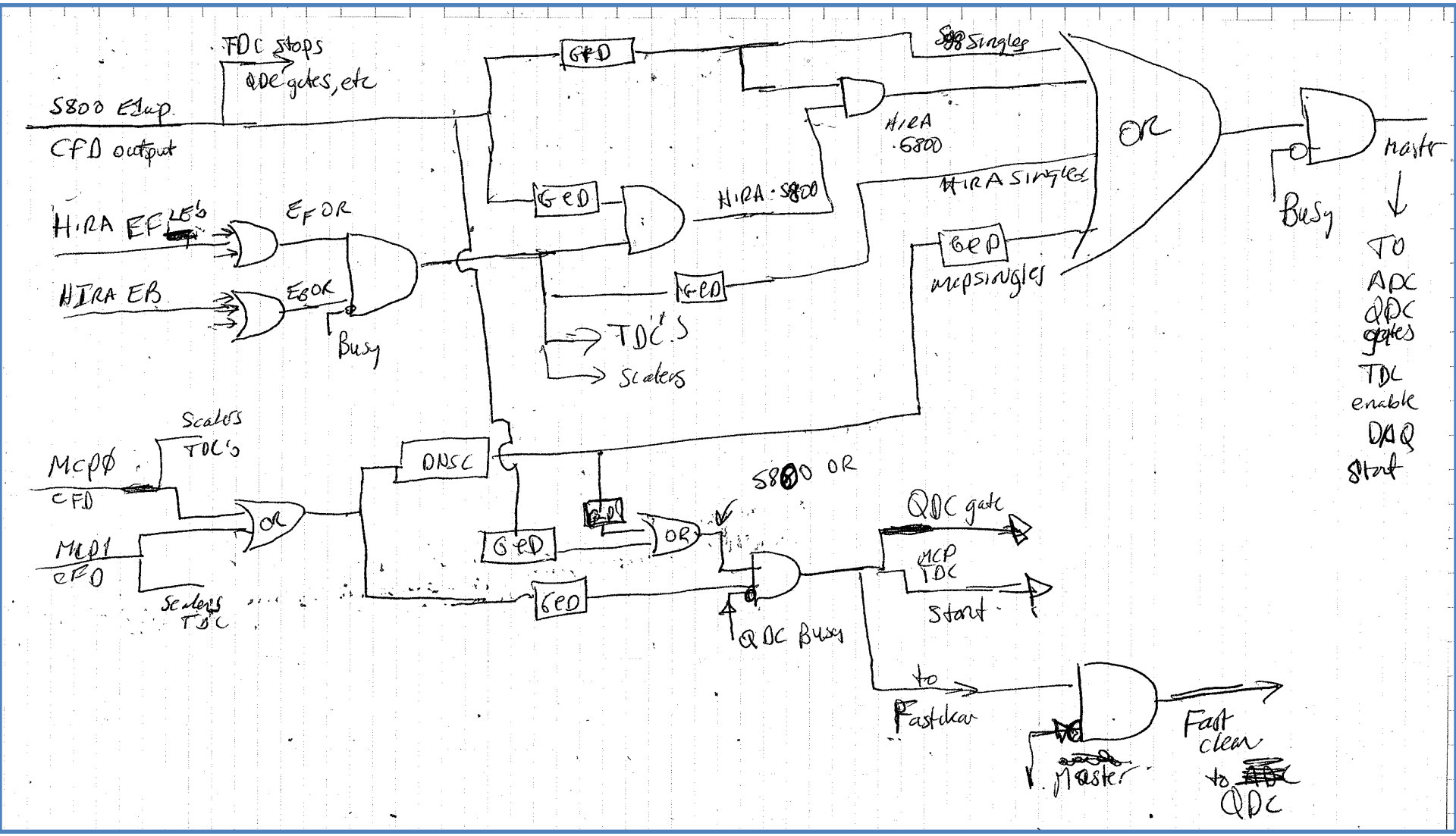

# Future needs

- **FUTURE** — HiRA and FRIB
  - Coupling to new devices: HRS, ReA beams, TPCs . . .
  - Merging data and timestamp mechanisms
  - Upgrade of CsI(Tl) crystals
- **Online analysis —** process merged data online
- **Offline analysis —** additional general tools for accessing and traversing the event buffers.
- **Suggestions** *(the views and opinions here do not necessarily represent those of the HiRA collaboration …)*
  - Software islands
  - Coding workshops?
  - Communication and documentation