Actinide Targets for RIBs from Fission

Workshop on

Electron Drivers for Radioactive Ion Beams

October 10, 2007

Newport News, VA

Dan Stracener
Physics Division, ORNL

Outline

- **Description of uranium targets at the HRIBF**
  - **Target production methods**
  - **Yields comparisons**
- **UC targets for photofission**
  - **Geometries, power densities, fission rates**
- **Future Research**
  - **On-line experiments at the HPTL and the OLTF**

UC Targets for Production of Neutron-rich Beams

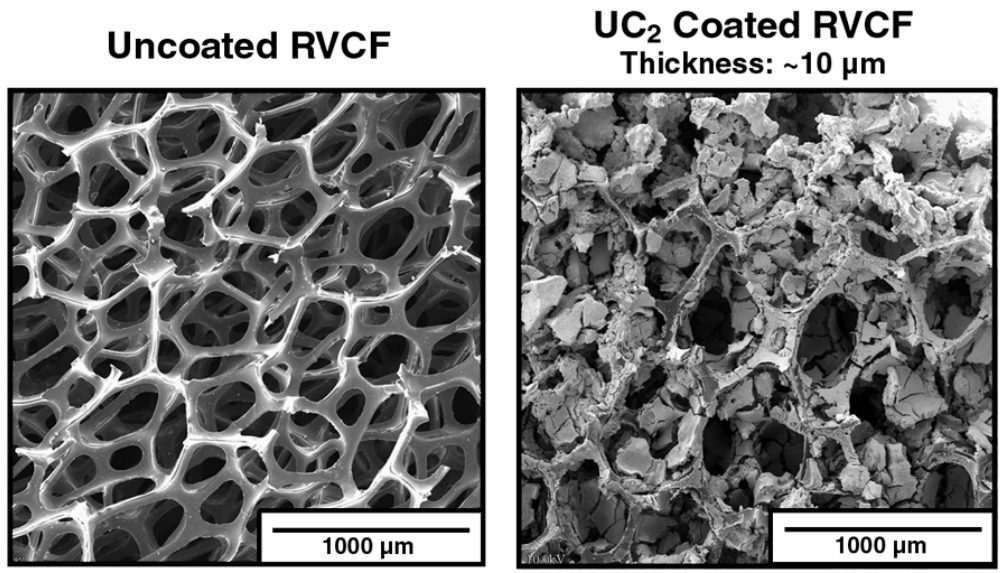

- RVC fiber diameter: 60 μm
- Matrix density: 0.06 g/cm^3
- UC coating thickness: 8 - 10 μm
- Target density: 1.2 g/cm^3
- Uranium thickness: 2.1 g/cm^2
- Mass ratio is U:C is 6:1
- Atomic ratio is UC_3

Target holder and transfer line to Ion Source

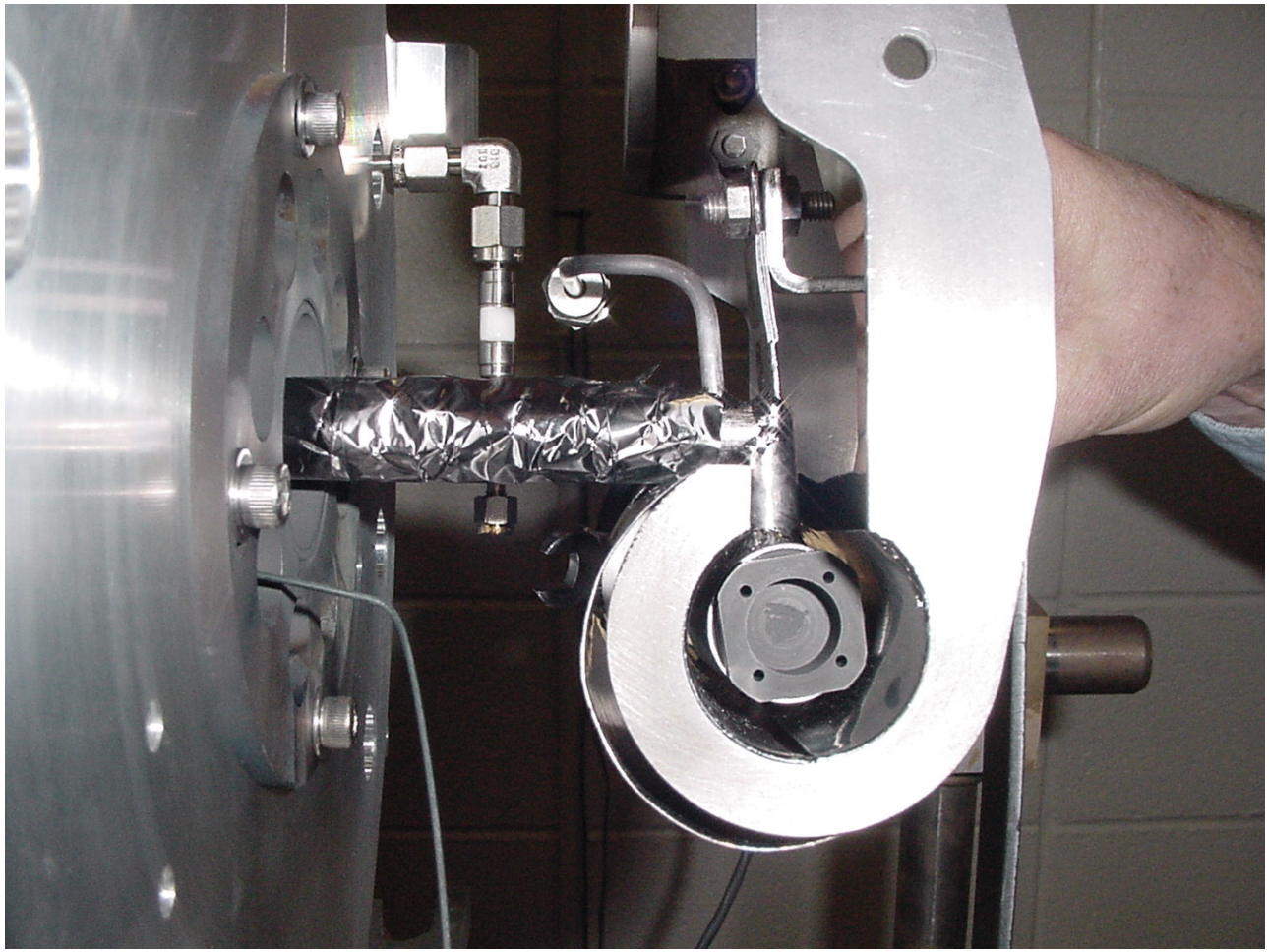

UC/RVC Fabrication Process

- Saturate RVC matrix with uranyl nitrate solution
- Heat to 300 C for a few hours (convert to uranium oxide)
- Repeat until the desired density of uranium is achieved
- Heat to 2000 C (convert to uranium carbide)
  - additional carbon must be added so that the RVC matrix is not compromised

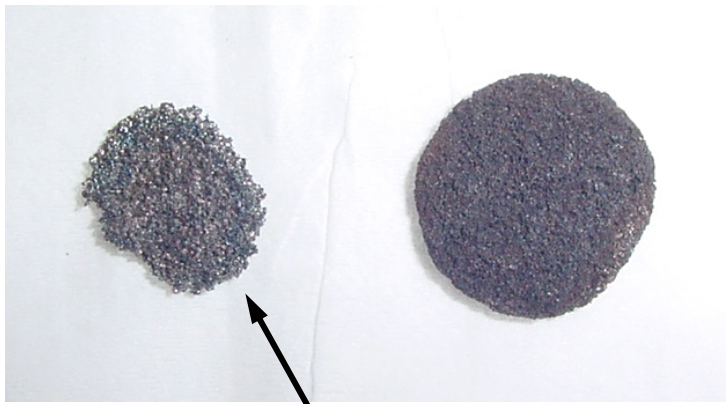

no additional carbon added

effect of 'too much' oxygen in UC target

Pressed-powder UC_x targets at HRIBF

- **UC_x targets are fabricated by ORNL personnel in the Metals & Ceramics Division**
  - **uranyl nitrate solution is mixed with graphite powder and heated to 1925 C to form UC_x**
  - **UC_x is ground down to ~ 3-micron diameter powder**
  - **This UC_x powder is mixed with a customized graphite powder**
    - **64% natural graphite (Graftech)**
    - **16% synthetic graphite (SGL Carbon KRB2000)**
    - **20% resin (Durite SC-1008)**
  - **The mixture is pressed at relatively low pressure in a die and then sintered at 350 C for a few hours**
- **The last 4 targets used on the RIB Injector have met or exceeded our best expectations for RIB yields (even for short-lived isotopes)**
- **The cost per target is**
  - **Starting material: $100 (12 g of uranyl nitrate)**
  - **Labor: $2400 (including ORNL overhead)**
  - **This is about 20% of the average cost of the UC/RVC targets**

UC_x pressed-powder pellets

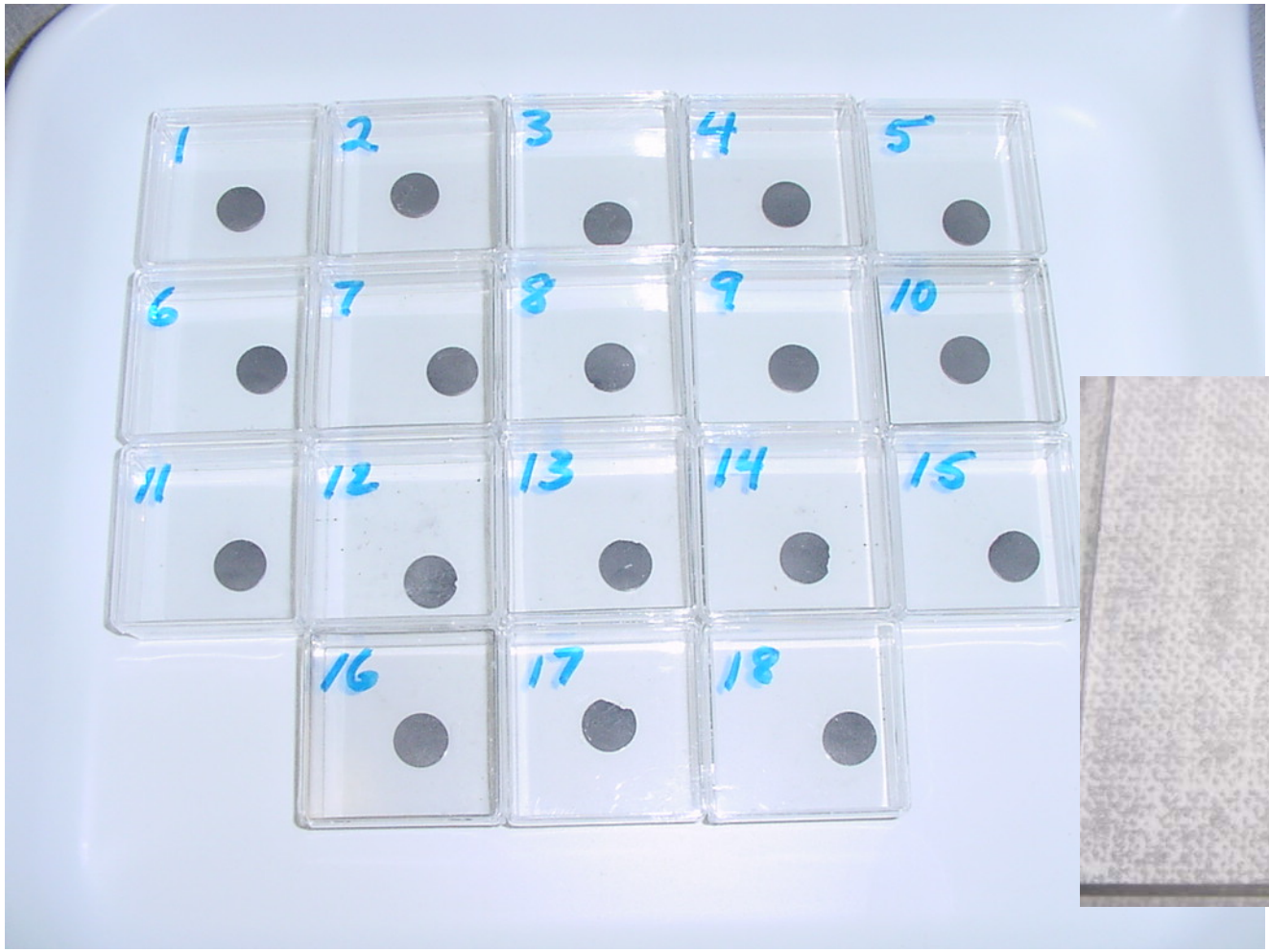

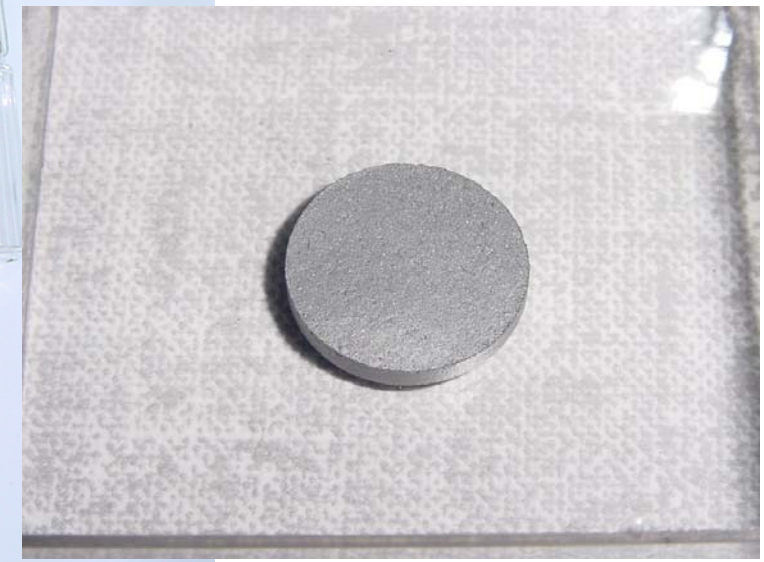

Recent yields from the UC_x pressed-powder targets

Isotope	$T_{1/2}$ (seconds)	Expected Rate (pps)	Delivered RIB Intensity (pps)
^{76}Cu	0.65	150	200 – 300
^{77}Cu	0.46	20	15 – 30
^{78}Cu	0.35	1.5	1 – 3
^{83}Ga	0.30	20	60
^{84}Ga	0.08	1.9	0.5 – 2.7
^{78}Ge	88	2×10^6	1×10^6
^{80}Ge	29.5	2×10^5	1×10^5
^{84}Se	186	8000	15000
^{130}Sn	223	5×10^5	2×10^5
^{132}Sn	39.7	1.2×10^5	5×10^4
^{134}Sn	1.04	700	300 – 700
^{132}Te	2.8×10^5	4×10^7	6×10^7
^{134}Te	2520	3×10^5	3.3×10^5

Recent test of high-density UC target

- **Produced using a hot-press technique**
- **The sample sintered during this process resulting in very low porosity**
- **Density is 10.5 g/cm^3**
- **The nominal density of UC_2 is 11.3 g/cm^3**
- **Recently tested using low intensity beams (< 50 nA) of 40 MeV protons at HRIBF**

Comparison of yields from different UC targets
(preliminary results for high-density UC)

Isotope	Half-life	Low-density UC (2 g/cm^3)	High-density UC (10.5 g/cm^3)	Ratio (low/high)
		(pps/μA)	(pps/μA)	
^{78}Ga	5.1 sec	7.3×10^5	2.7×10^4	27
^{89}Rb	15.4 min	6.3×10^7	1.2×10^5	525
^{93}Rb	5.8 sec	9.4×10^6	8.0×10^3	1175
^{93}Sr	7.4 min	2.2×10^7	6.9×10^4	319
^{132}Sn	39.7 sec	9.5×10^5	1.5×10^4	63
^{134}Te	42 min	3.2×10^7	2.6×10^5	123
^{135}I	6.6 hrs	7.4×10^7	1.7×10^6	44

Nominal density of UC_2 is 11.3 g/cm^3

Conservative target design for initial evaluation of target for photofission

Density (g/cm^3)	2.3	3	6
Diameter (cm)	1.5	3	3
Thickness (g/cm^2)	4.2	30	30
Mass (g)	7.3	212	212

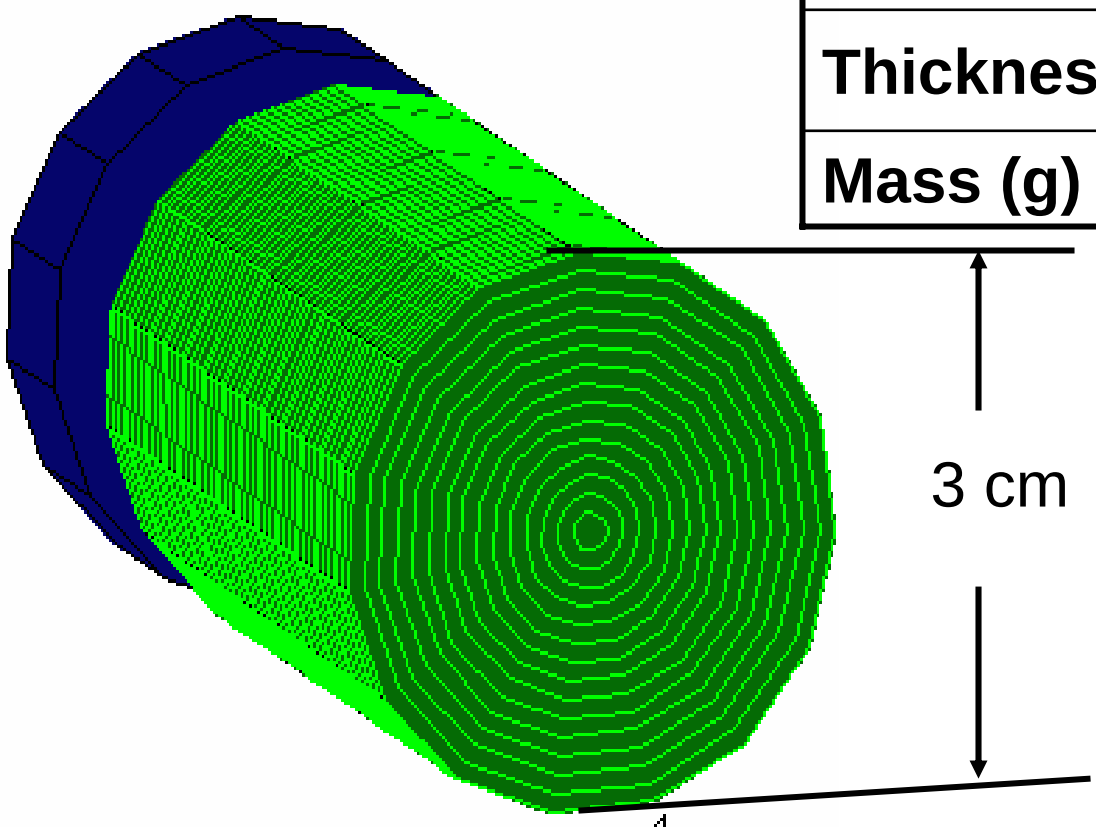

UC_x targets

		HRIBF	Photofission	ISOLDE
Diameter	cm	1.5	3.0	1.5
Length	cm	1.8	10	20
Density	g/cm^3	2.3	3	2 – 3
Thickness	g/cm^2	4.2	30	50
Mass of UC_x	g	7.3	212	88
Production Beam		52 MeV ^1H	25 MeV e^-	1.4 Gev ^1H
Average beam intensity	μA	15	2000	2
Average beam power	kW	0.78	50	2.8
Deposited in target	kW	0.60	10	1.2
Average power density	W/g	82	47	14
Peak power density	W/g	294	272	
Fission Rate	f/sec	5×10^{11}	10^{13}	10^{12}

Example of a somewhat more aggressive design

ρ=6 g/cm^3
D_1=5 cm
D_2=2cm
t=30g/cm^2 (5X_0)
M=495 g

2.3 x UC_x front surface area compared to 3 cm dia. Cylinder

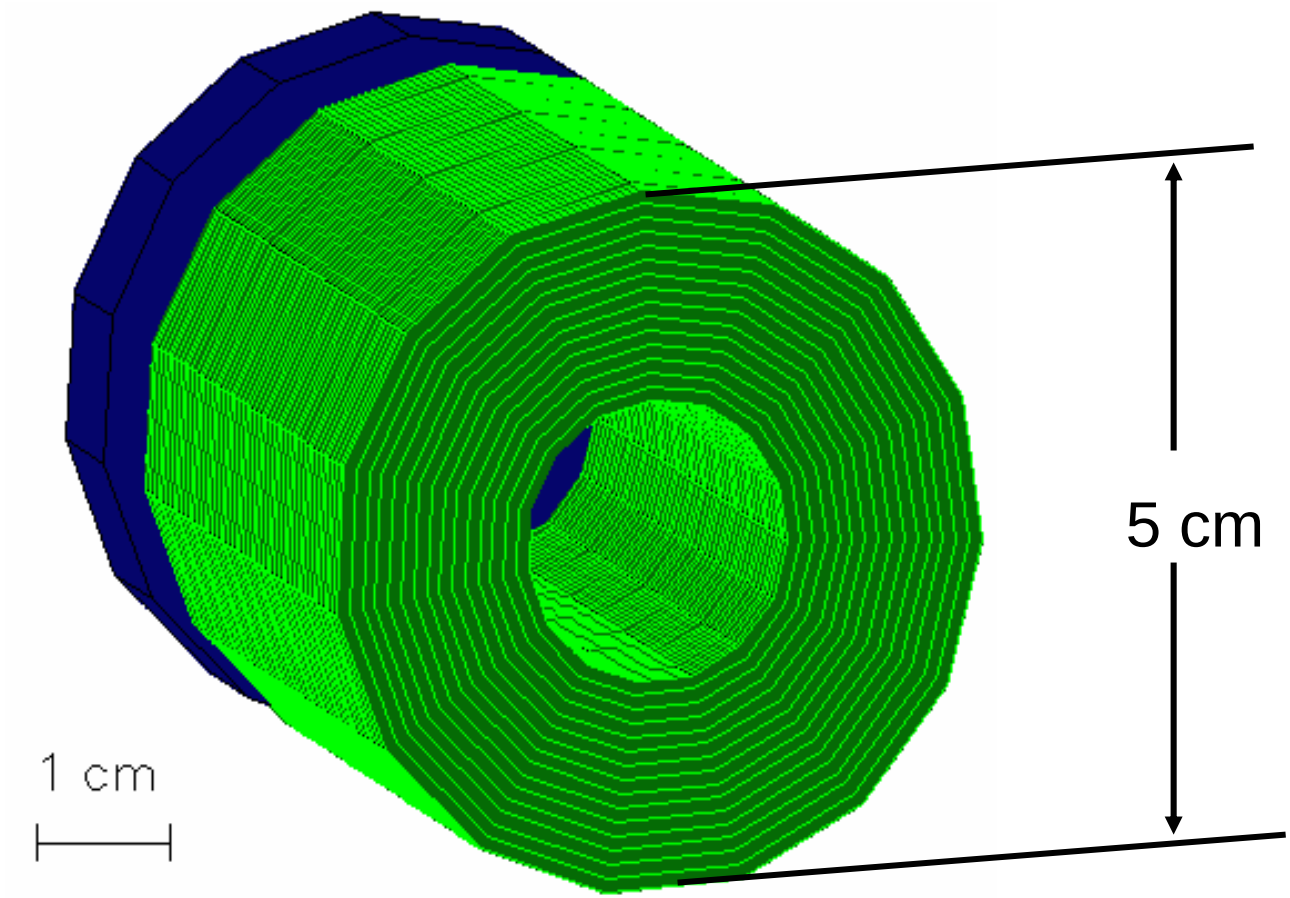

Plans for Actinide Target Development at the HPTL

- **Investigate release efficiency from larger target volumes**
- **Determine limits of deposited power density as a function of target density**
- **Benchmark simulations of temperature distributions to make sure the models are realistic**
- **Use beam manipulation (rastering, defocusing) to lower deposited power density in the target**
- **Measure target lifetimes for various beam powers and geometries**
- **Implement new target-cooling techniques to allow for higher beam powers**
- **Use deuteron beams and a converter in front of the target to compare yields from proton-induced fission and neutron-induced fission**

Plans for Actinide Target Development at the OLTF

- **On-line actinide target tests**
  - **Measure release efficiency of fission fragments from UC_2 targets with well defined parameters**
    - **densities in the range between 6 g/cm^3 and 10 g/cm^3**
    - **uranium to carbon ratios**
    - **UC grain size**
    - **type of graphite used**
  - **Continue release measurements from ThO_2, UB_4, US, ThC, …**

- **Develop new fabrication techniques to make higher density UC targets while maintaining sufficient porosity**

- **Develop a technique to maintain higher concentrations of sulfur atoms in the UC target (needed to increase yields of short-lived Ge and Sn isotopes)**