eRIBs'07

Electron Accelerators for Radioactive Ion Beams

Lia Merminga

Center for Advanced Studies of Accelerators (CASA)

Jefferson Laboratory

October 10, 2007

Outline

- Electron driver design specifications
- Electron driver accelerator options
  - Linacs
  - Racetrack Microtrons
  - Rhodotrons
- Accelerator technology choices
  - Electron source and injector
  - Superconducting RF
- Summary

Electron Driver Design Specifications

- **Beam energy: 25 – 50 MeV**
- **Beam power: ~ 50 kW – 1 MW**

  ⇨ **Average beam current: ~ 1 – 20 mA**
- **Duty factors between 10's Hz and CW have been discussed.**

Electron Driver Accelerator Options

- Linacs
  - Normal Conducting RF (NCRF) linacs
  - Superconducting RF (SRF) linacs
- Racetrack microtrons
- Rhodotrons

Normal Conducting RF Linacs

~100 MeV NCRF linacs commercially available,
but operation limited to low duty factor:
≤ μsec pulses at ~10 Hz.

Examples:

Swiss Light Source Electron Injector from ACCEL

SOLEIL Electron Injector from THALES

100 MeV NCRF Injector

Injector to SOLEIL
Built by THALES

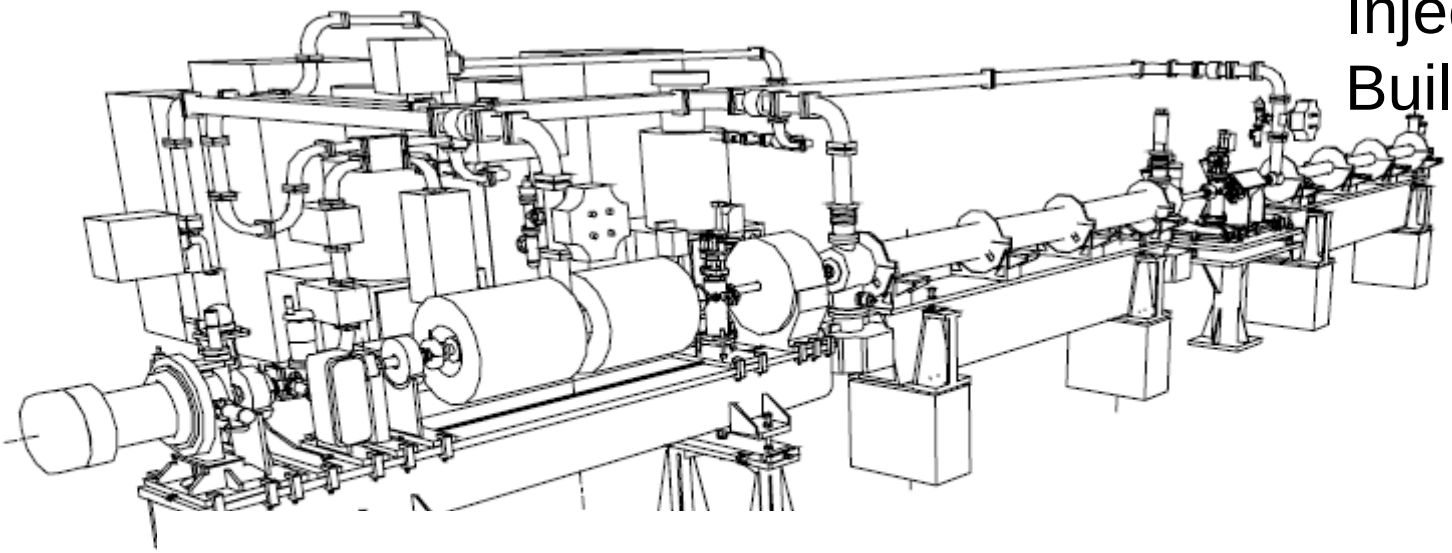

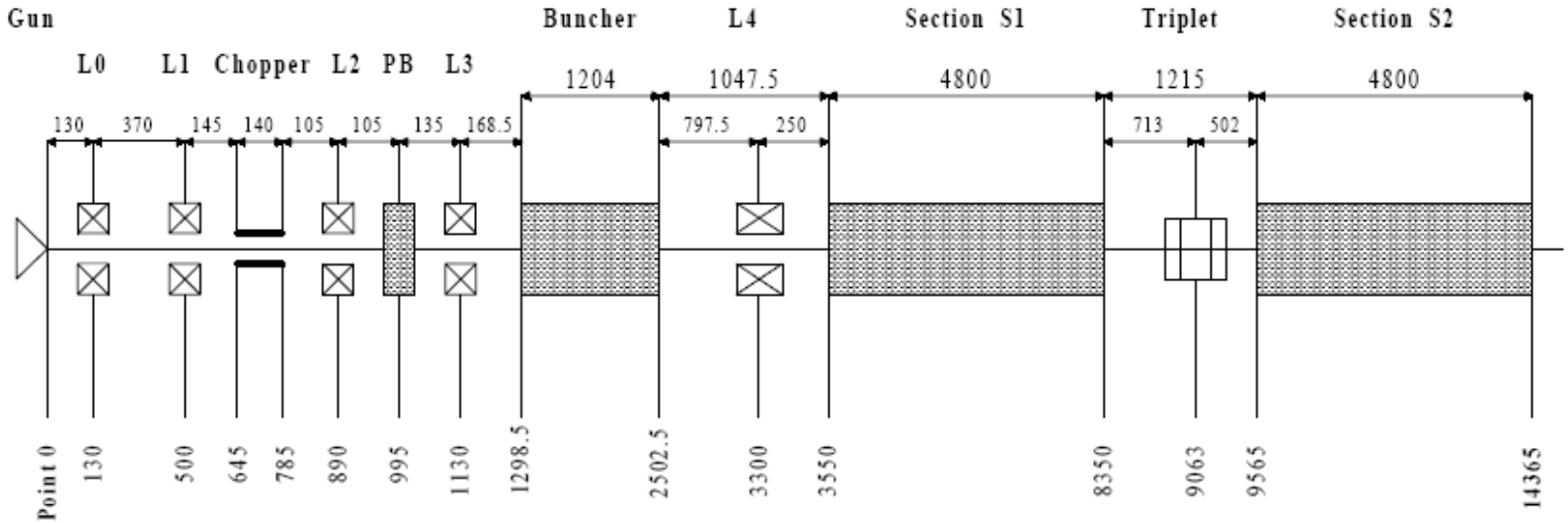

Superconducting RF Linacs

- **Existing**
  - **CEBAF Injector**
  - **JLab IR FEL Upgrade**
  - **MACSE: An experimental SRF linac**

- **Conceptual**
  - **Electron driver for SPIRAL II (electron option)**
  - **A JLab proposal – *R. Kazimi, CAARI 2006***
  - **Electron driver for TRIUMF – *Talk by Shane***

CEBAF Injector Layout

Layout of 6 GeV CEBAF Injector

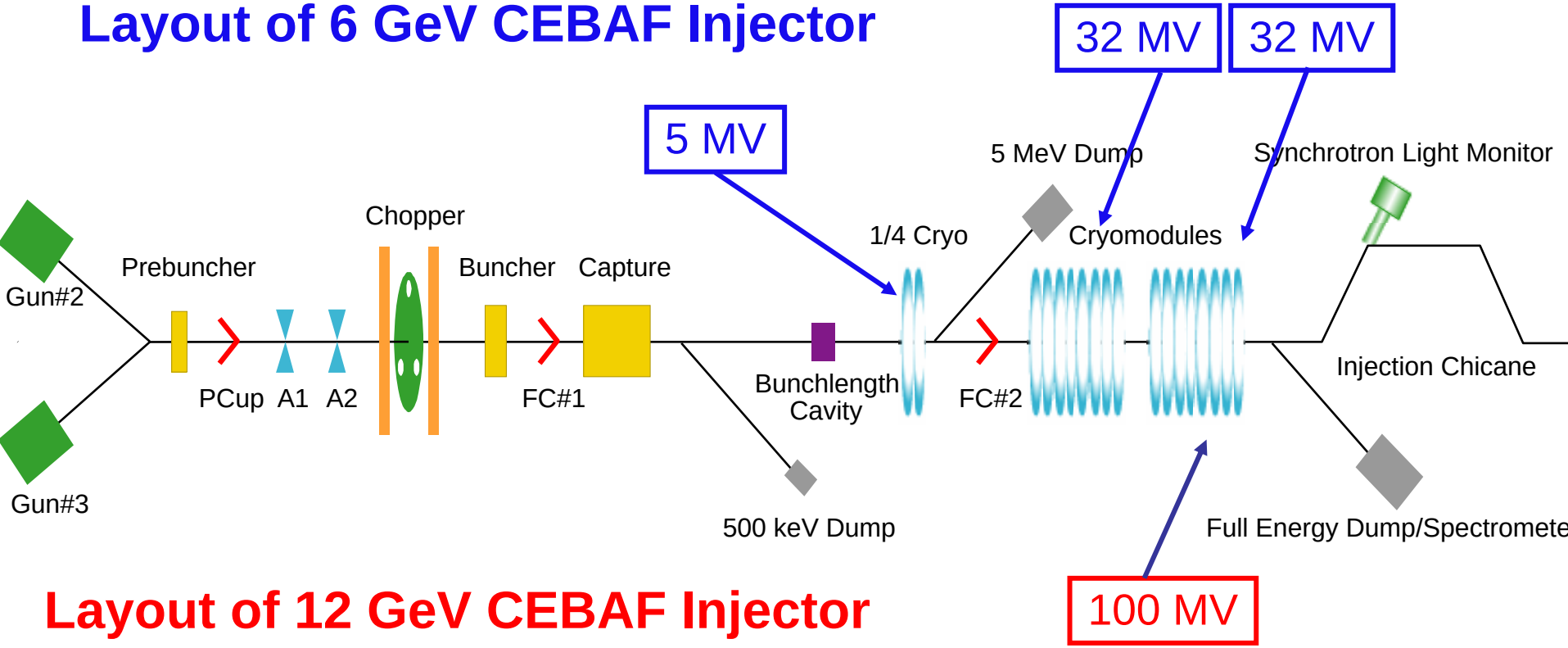

Layout of 12 GeV CEBAF Injector

100 MV

The Jefferson Lab IR FEL Upgrade

Accelerated and energy recovered up to 9.1 mA at 150 MeV

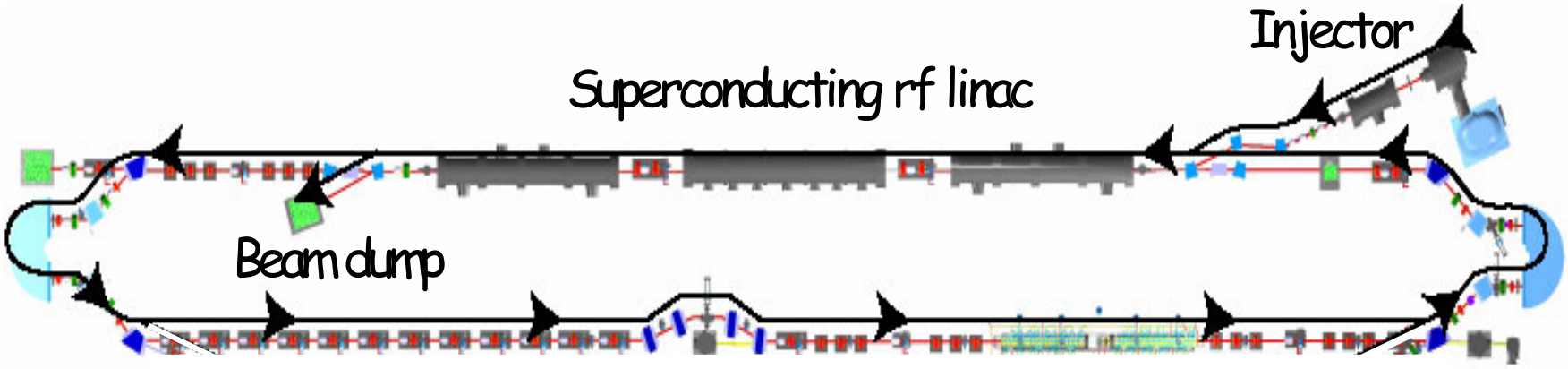

Up to 1.2 mA without ER in IR Demo

JLab IR FEL Electron Beam Parameters	Design	Achieved
Energy (MeV)	145	160
Bunch charge (pC)	135	270
Average current (mA)	10	9.1
Bunch length* (fs)	200	120
Norm. emittance* (mm-mrad)	30	7
Max. Bunch rep. rate (MHz)	74.85	74.85

*Quantities are rms

Electron Driver for SPIRAL II (electron option)

Conceptual design modeled after MACSE: an experimental SRF linac

E ~ 45 MeV
I ~ 0.5 mA
f_{RF}=1.5 GHz

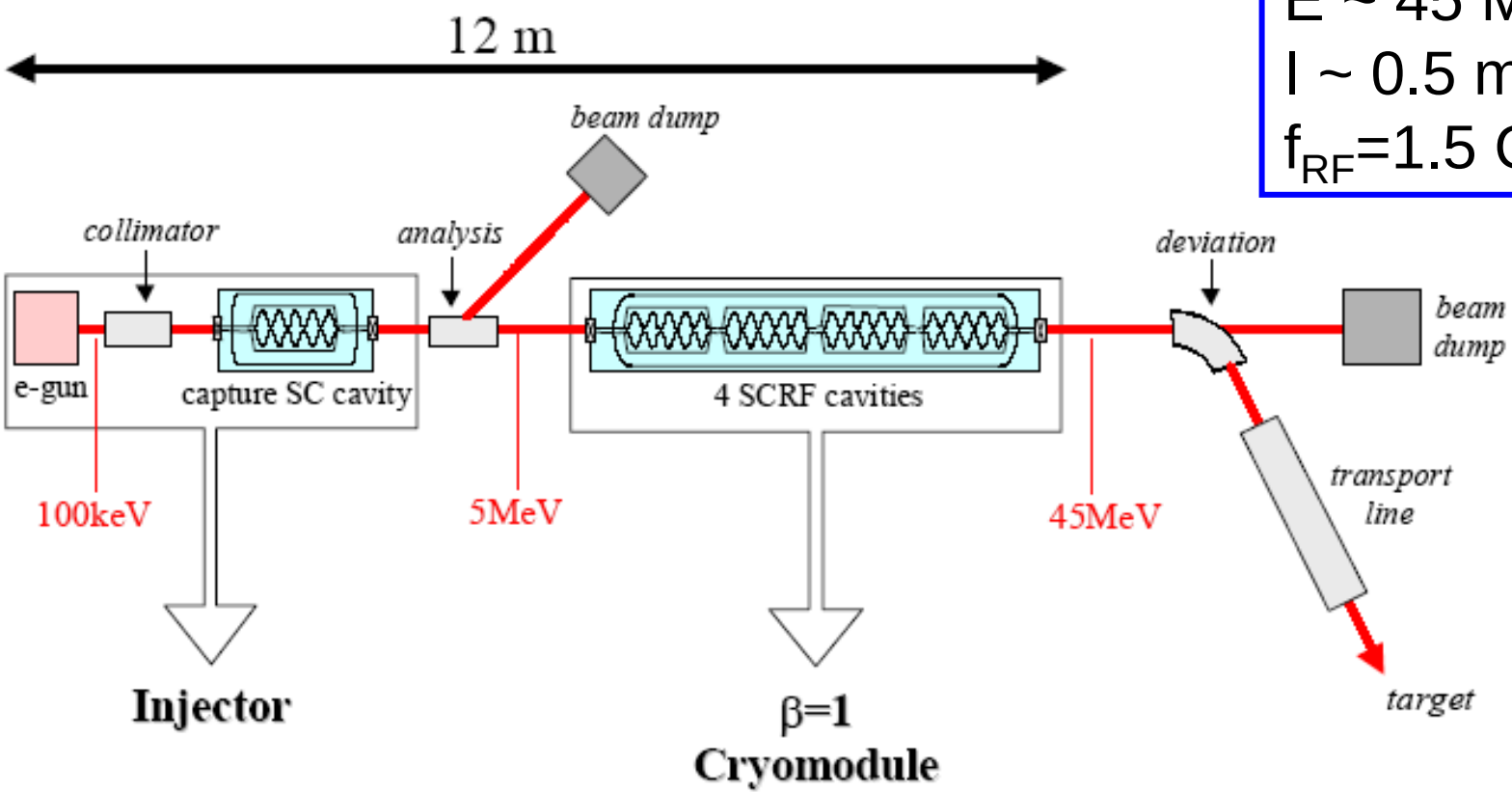

Figure 6 Layout of the electron driver

A JLab proposal

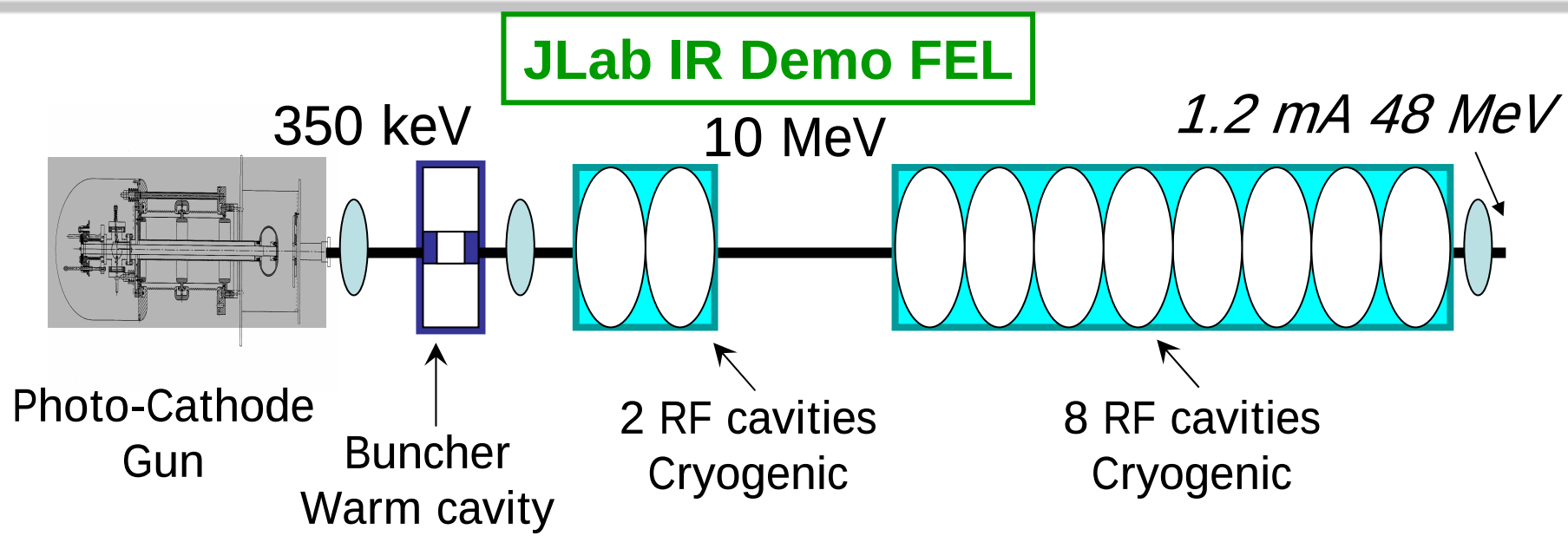

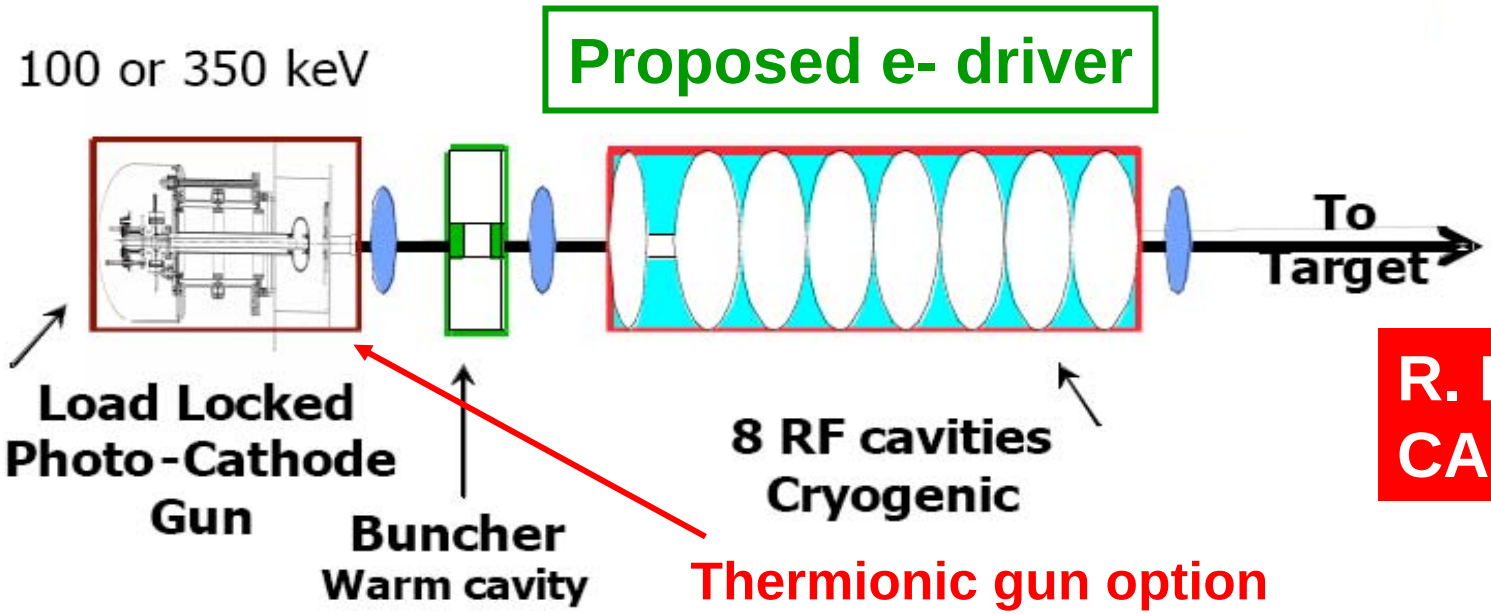

R. Kazimi, CAARI 2006

Racetrack Microtrons

- *Examples* of RTMs
  - Mainz RTMs
  - Wisconsin RTM (Pulsed)
  - Lund RTM
  - University of Illinois Cascade Microtron
  - The NIST RTM
  - The Novosibirsk High Power THz FEL
  - Novosibirsk FEL Upgrade

The Illinois Cascade Microtron

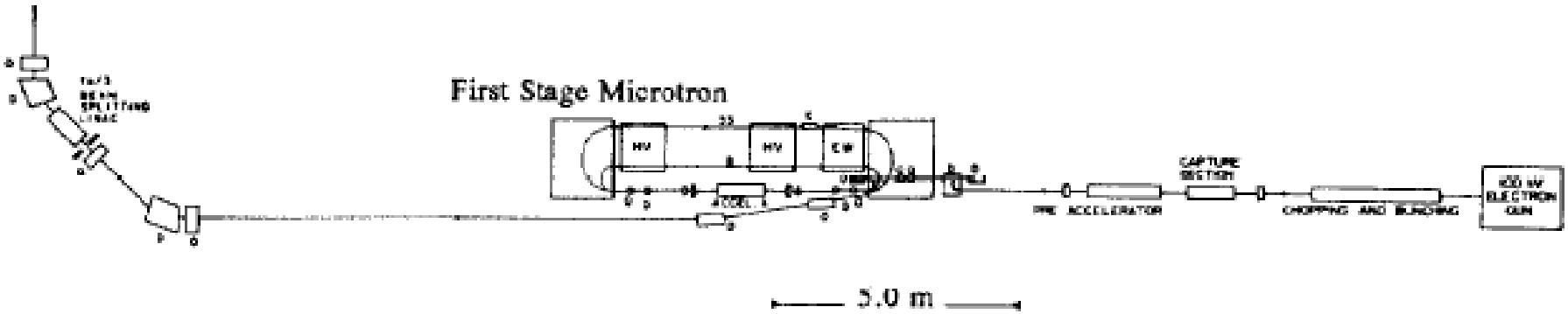

Injection energy = 4.5 MeV
Output energy = 45 MeV (RTM Stage 1)
Energy gain per turn = 1.45 MeV
Average beam current = 100 μA
CW RT standing wave linac structures

Most of the components of stage 1 are available in Athens.

L. Cardman

The NIST RTM

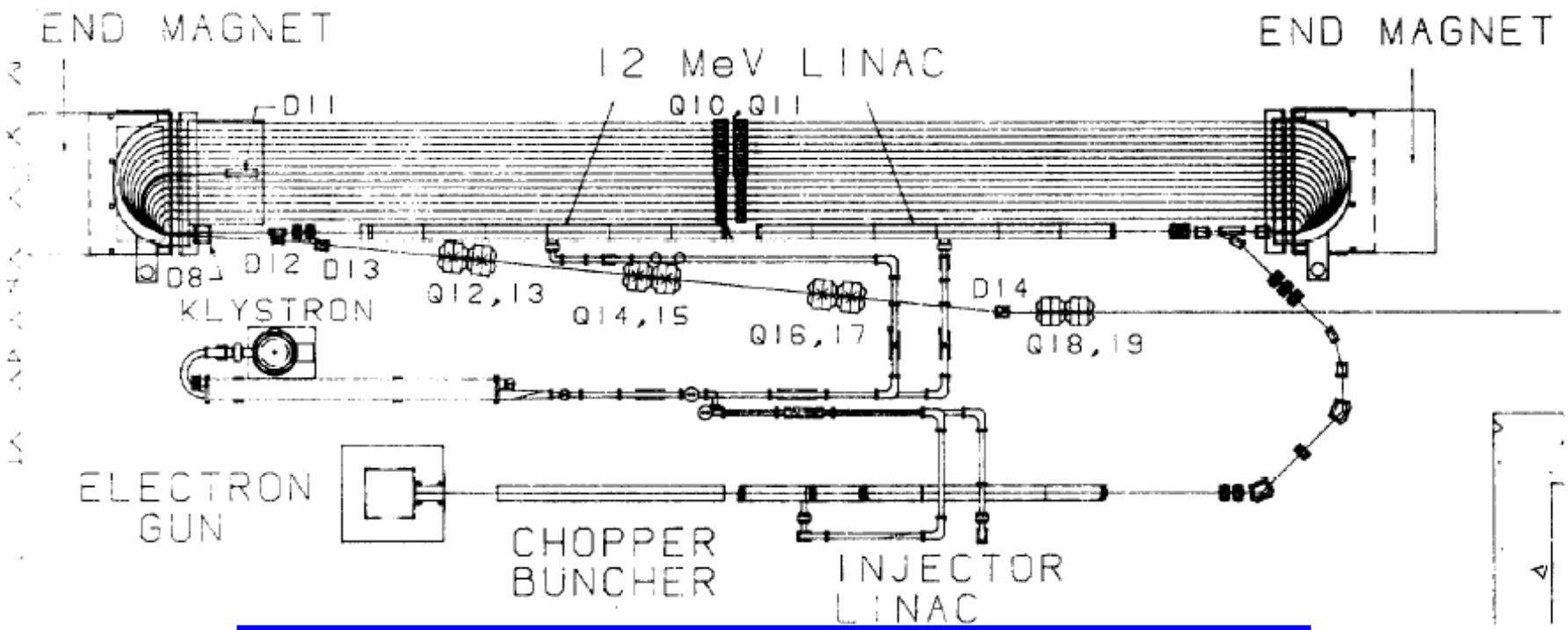

Injection energy = 5.5 MeV
Output energy = 17-185 MeV
Energy gain per turn = 12 MeV
Average beam current = 550 μA
RF frequency = 2380 MHz, Duty factor CW

Presently being assembled in Athens

The Novosibirsk High Power THz FEL

Accelerated and energy recovered highest average current to date: 20 mA at 1.7 nC per bunch

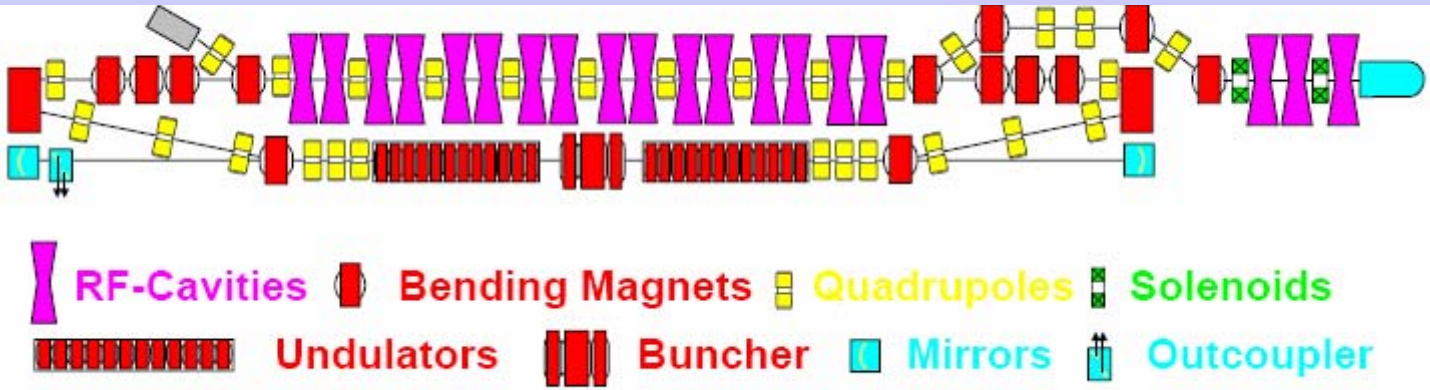

	May 2005
RF frequency, MHz	180
Bunch repetition rate, MHz	11.2
Maximum average current, mA	20
Maximum electron energy, MeV	12
Normalized beam emittance, mm*mrad	30
Electron bunch length in FEL, ns	0.07
Peak current in FEL, A	10

Features

- RF frequency 180 MHz
- Normal conducting RF cavities
- CW operation

Full scale Novosibirsk FEL

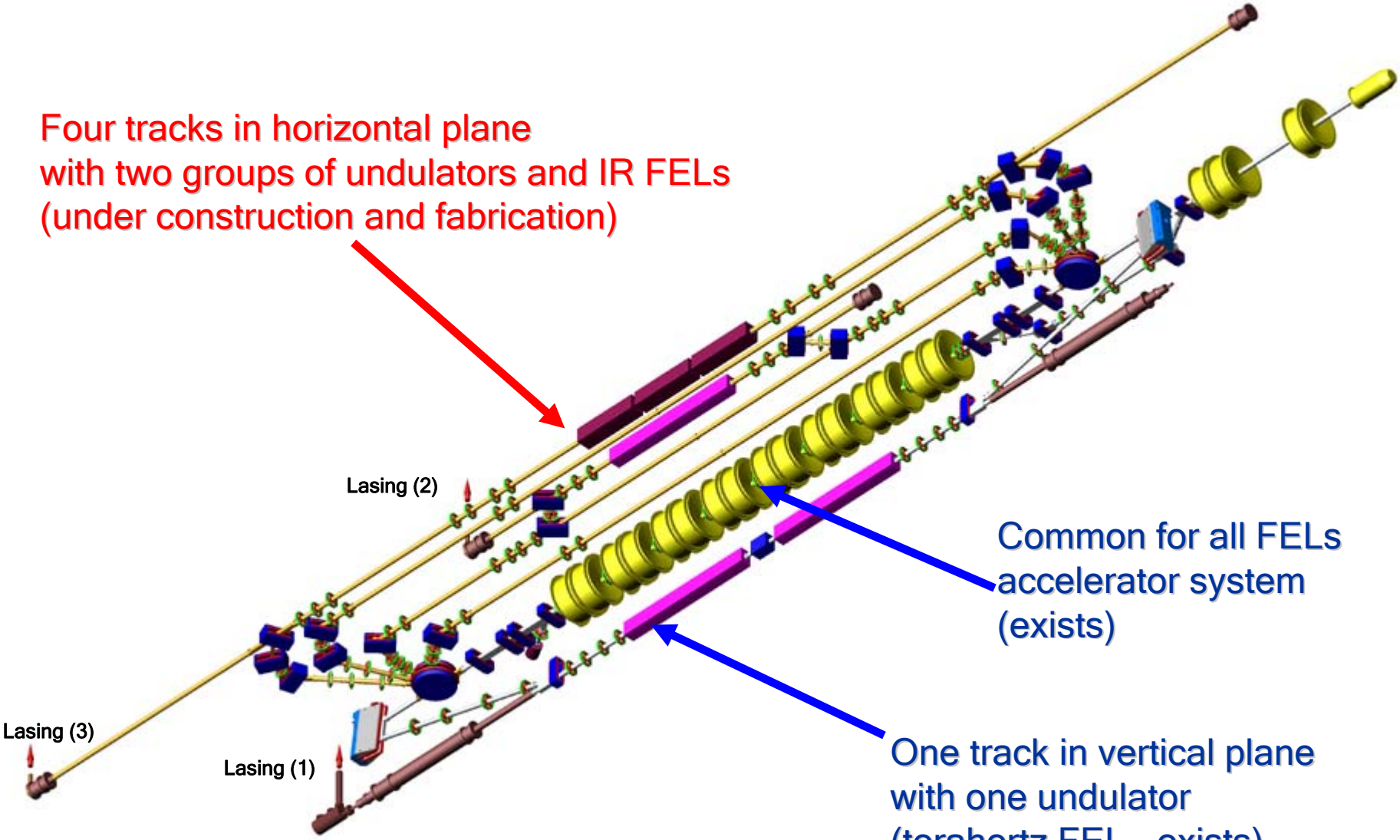

Novosibirsk FEL parameters

	1-st stage (in operation)	2-nd stage (assembly)
Electron beam energy, MeV	12	40
Number of orbits	1	4
Maximum bunch repetition frequency, MHz	11.2	90
Beam average current, mA	20	150
RF frequency, MHz	180	180
Year of commissioning	2002	2007

Rhodotron Accelerators

Rhodotron operating principle

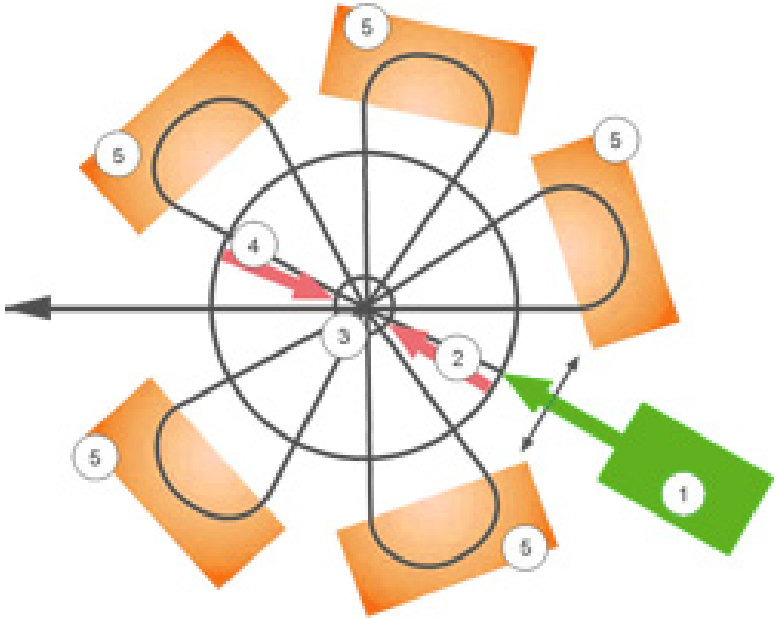

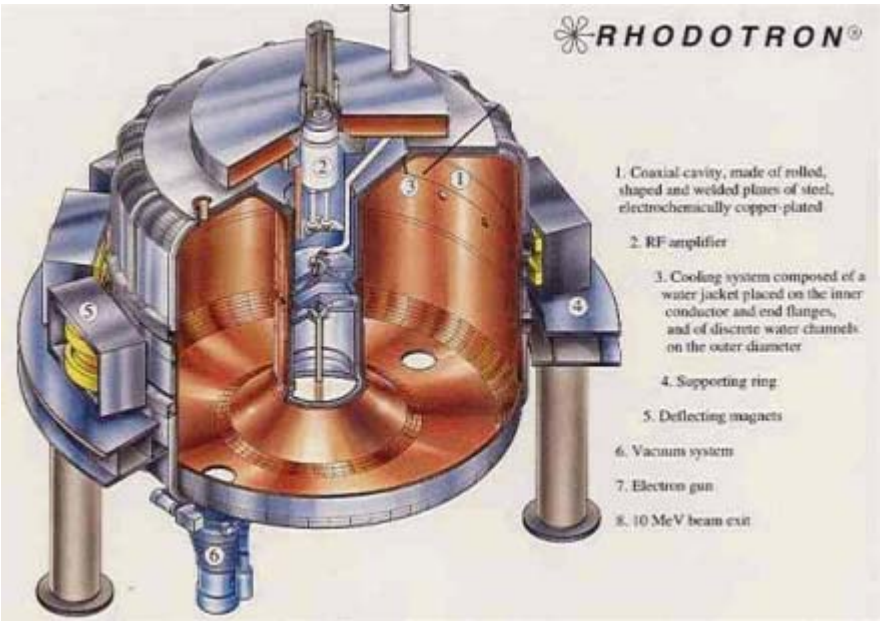

Rhodotron built by IBA

Electron Driver Upgrade at HRIBF

Proposed layout of two Rhodotron accelerators

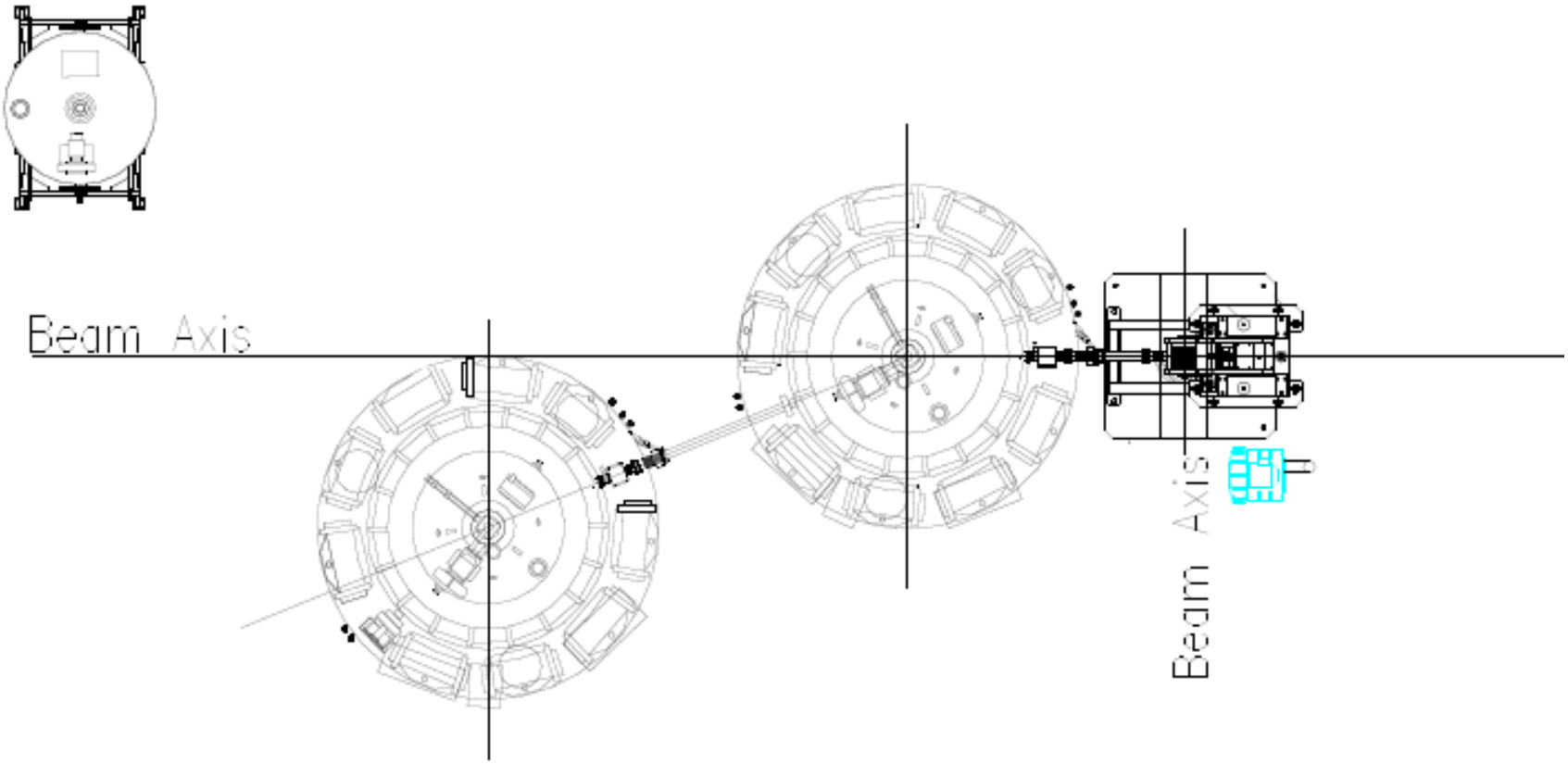

Accelerator Technology Choices and Considerations

Technology Choices

Electron sources and injectors

- Thermionic cathode
  - ✓ NIST/Illinois/CEBAF injectors -> MACSE
  - ✓ ELBE FEL
  - ✓ Novosibirsk FEL
  - ✓ SCSS
- Photocathode
  - ✓ CEBAF photoinjector
  - ✓ JLab FEL photoinjector
  - ✓ Cornell photoinjector

Superconducting RF

- RF power sources
- RF couplers
- HOM damping req's

CEBAF injectors

Last thermionic gun layout

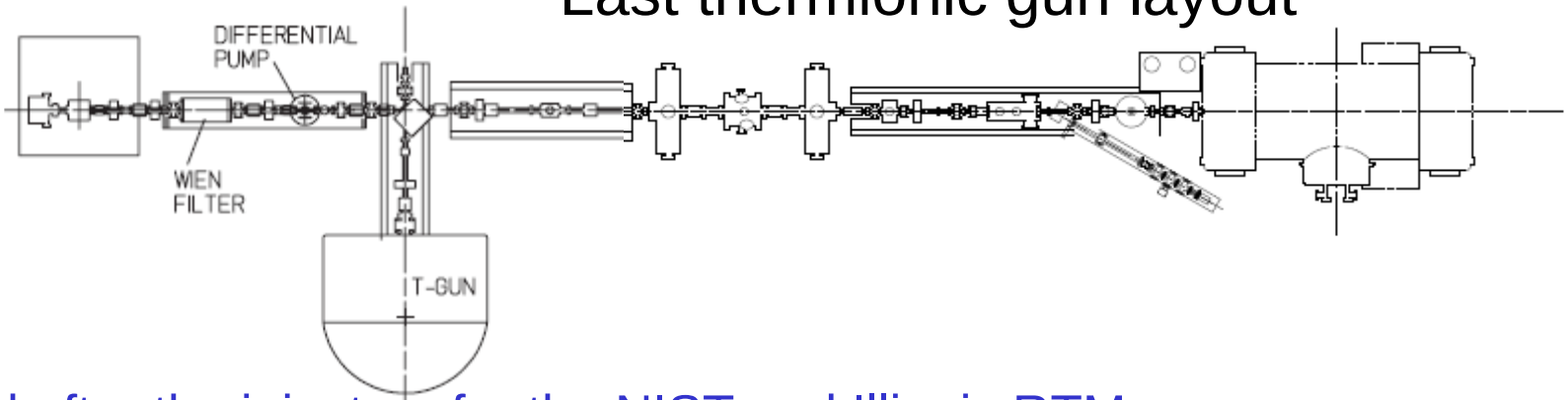

Modeled after the injectors for the NIST and Illinois RTMs.
Designed to deliver 200 μA of chopped bunched beam at 1.5 GHz with a chopping/bunching efficiency of 1/6.

Present layout with
two photocathode guns

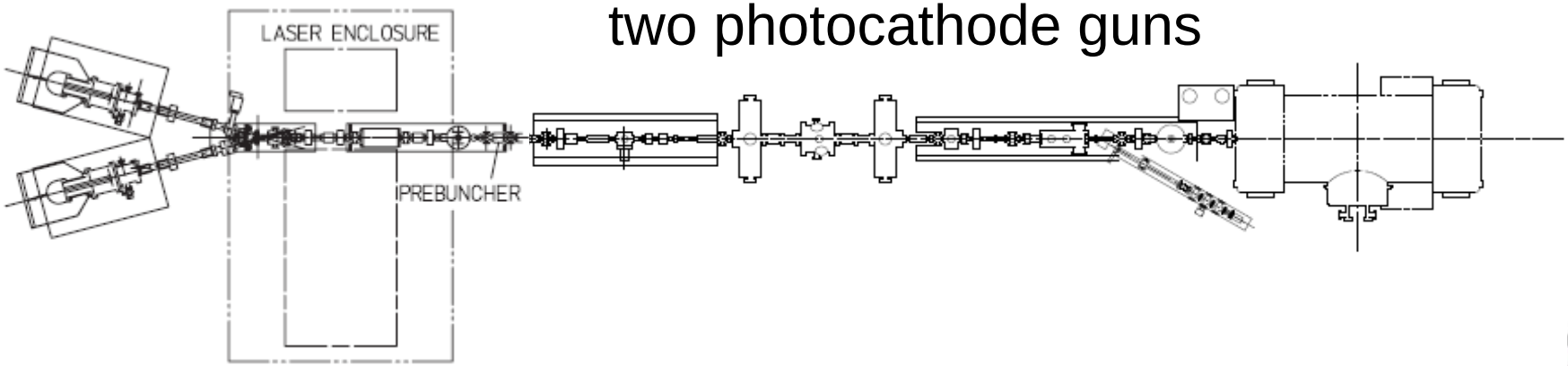

The ELBE Injector

ELBE-like injector: Gridded cathode – no choppers

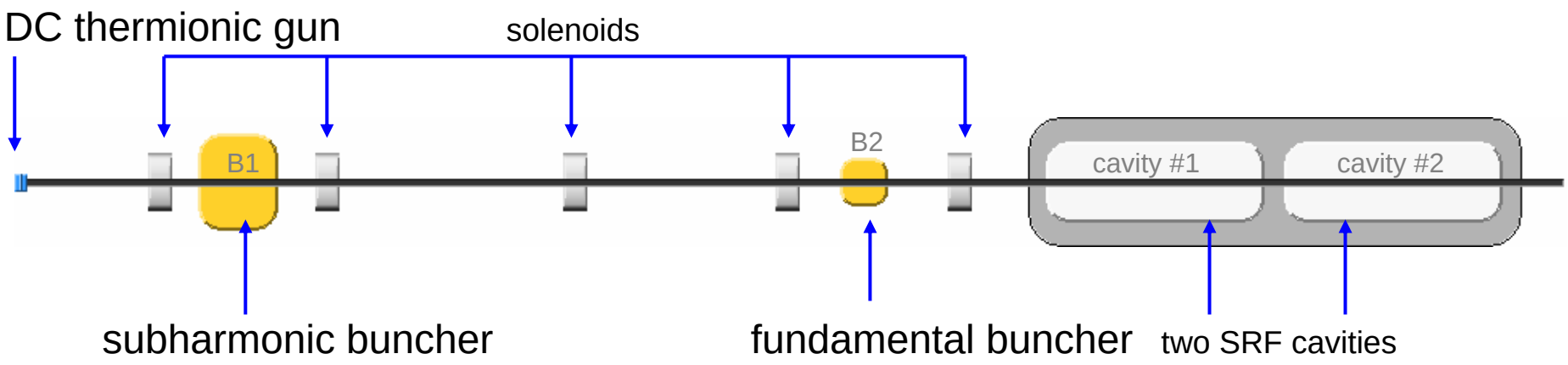

Courtesy P. Evtushenko

Novosibirsk FEL Injector

Gun: 300 keV DC gun with gridded cathode.
Delivers 20mA, 22.5 MHz at 1.5 nC

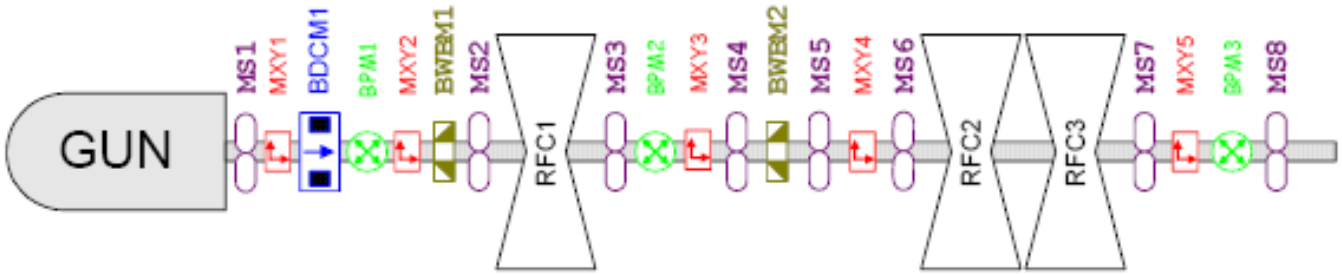

MS : focusing solenoid MXY : steering magnet BDCM : beam current monitor

BPM : bean position monitor BWBM : strip line monitor RFC : RF cavity

2 MeV Injector Parameters

♦ Bunch repetition rate, MHz	up to 22.5
♦ Charge per bunch, nC	1.5
♦ Start bunch length, ns	1.5
♦ Final bunch length, ns	0.12
♦ Final energy, MeV	2

The High performance SCSS Injector

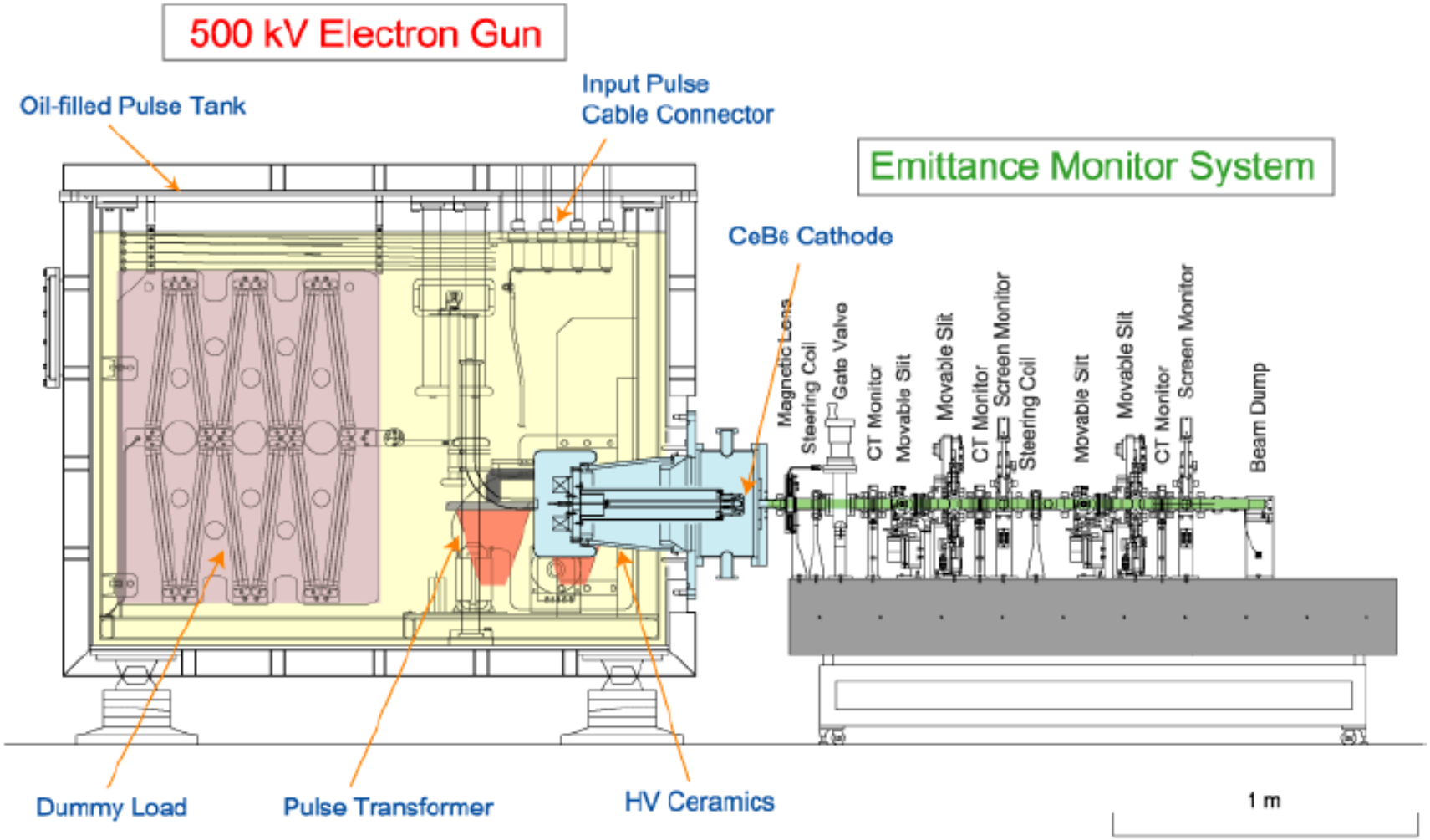

DC photoinjectors

State-of-the-art: JLAB FEL gun

- High repetition rate up to 75 MHz
- Average current up to 9 mA
- Cathode voltage: 350 – 500 kV
- $\varepsilon_{N,rms}$~ 7 - 10 mm-mrad for q ~ 60 - 135 pC/bunch (measured at the wiggler)

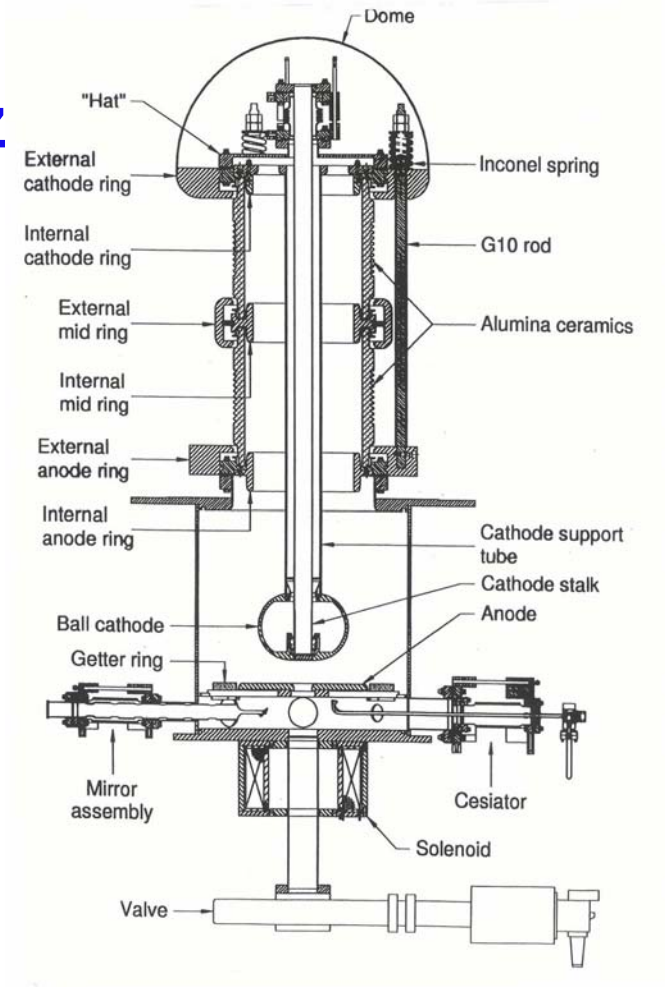

JLab FEL Gun

The JLab FEL is driven by a 350 kV DC GaAs electron gun, the highest average current photoemission source to ever drive an FEL

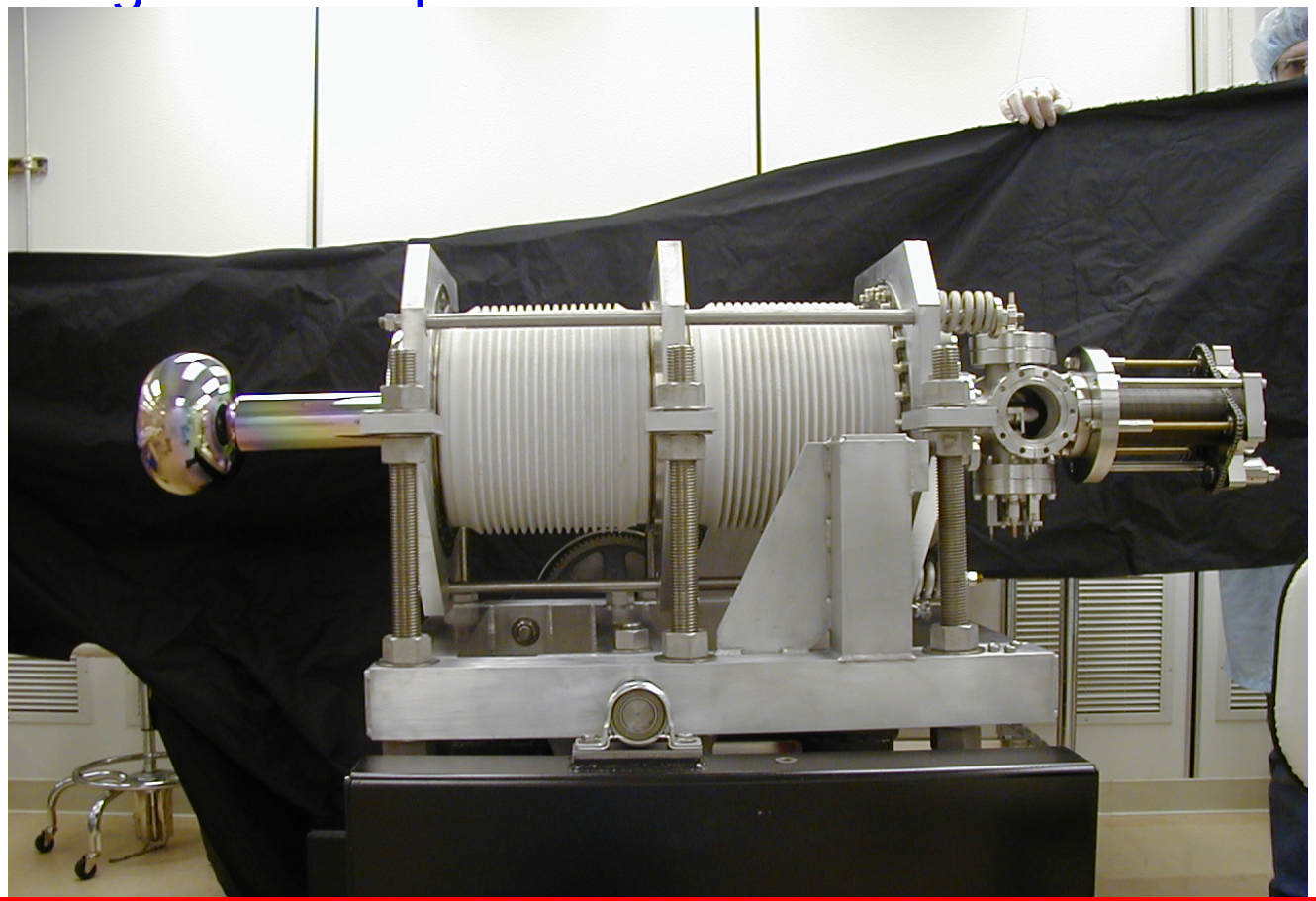

FEL gun slides courtesy C. Hernandez-Garcia

JLab FEL Gun (cont'd)

Electron bunches are generated when the GaAs photocathode is illuminated by pulses of green light from a drive laser

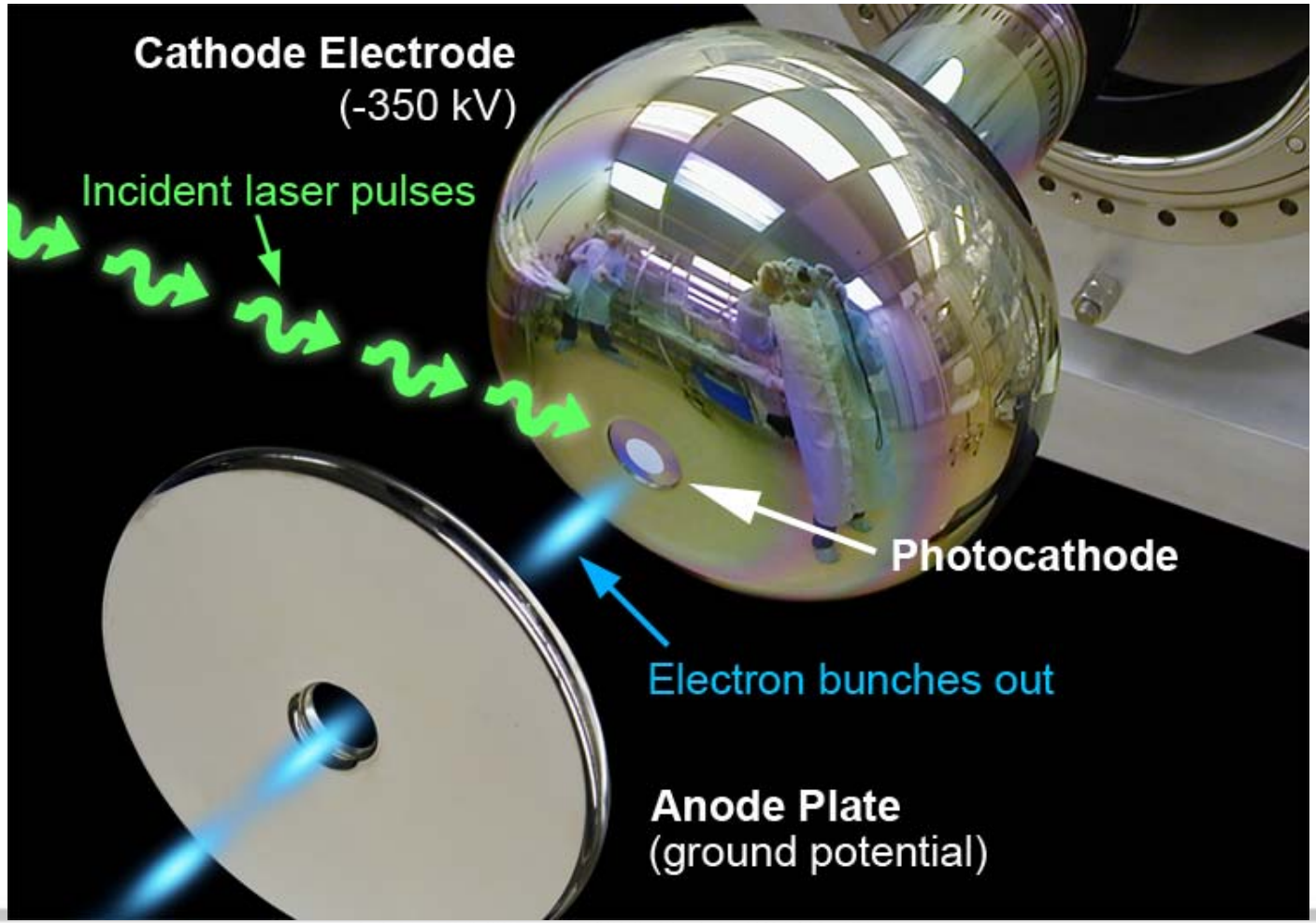

JLab FEL Gun (cont'd)

A single GaAs wafer has delivered over 7000 Coulombs and over 900 hours of CW beam at currents ranging from 1 to 8 mA. This wafer was been activated into a photocathode a total of 9 times in 36 months of operation with an average of 6 re-cesiations per activation.

Front-end view of the GaAs photocathode being illuminated by the drive laser while delivering 5 mA of CW electron beam

Photocathode Lifetime

Photocathode lifetime operating at 5 mA CW and 135pC bunch charge is about 550 Coulombs or 50 hours per re-cesiation

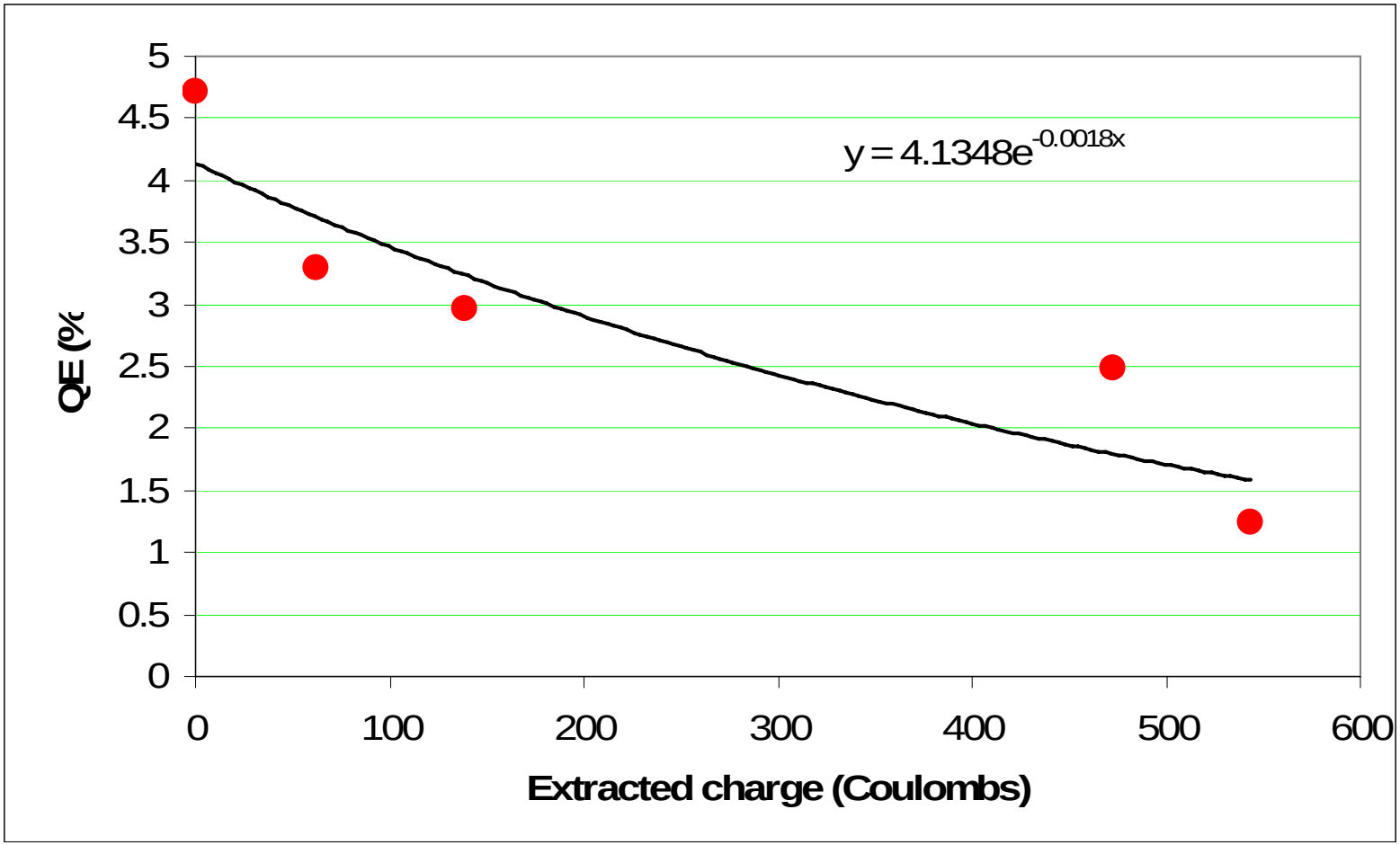

The electron gun vacuum environment is essential for a long-lifetime photocathode

- The pressure is 4×10^{-11} Torr in nominal operating conditions, read with an extractor gauge.

- The vacuum environment is qualified with an RGA

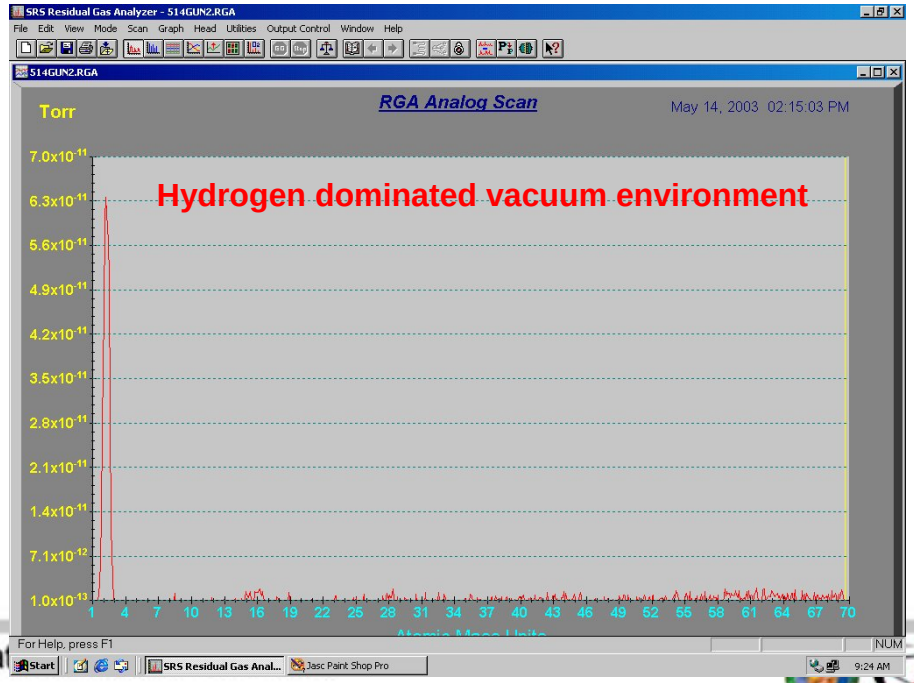

- Both gauges are turned off to prevent electrons produced by the hot filaments to interfere with high voltage operations.

JLab FEL Injector Layout

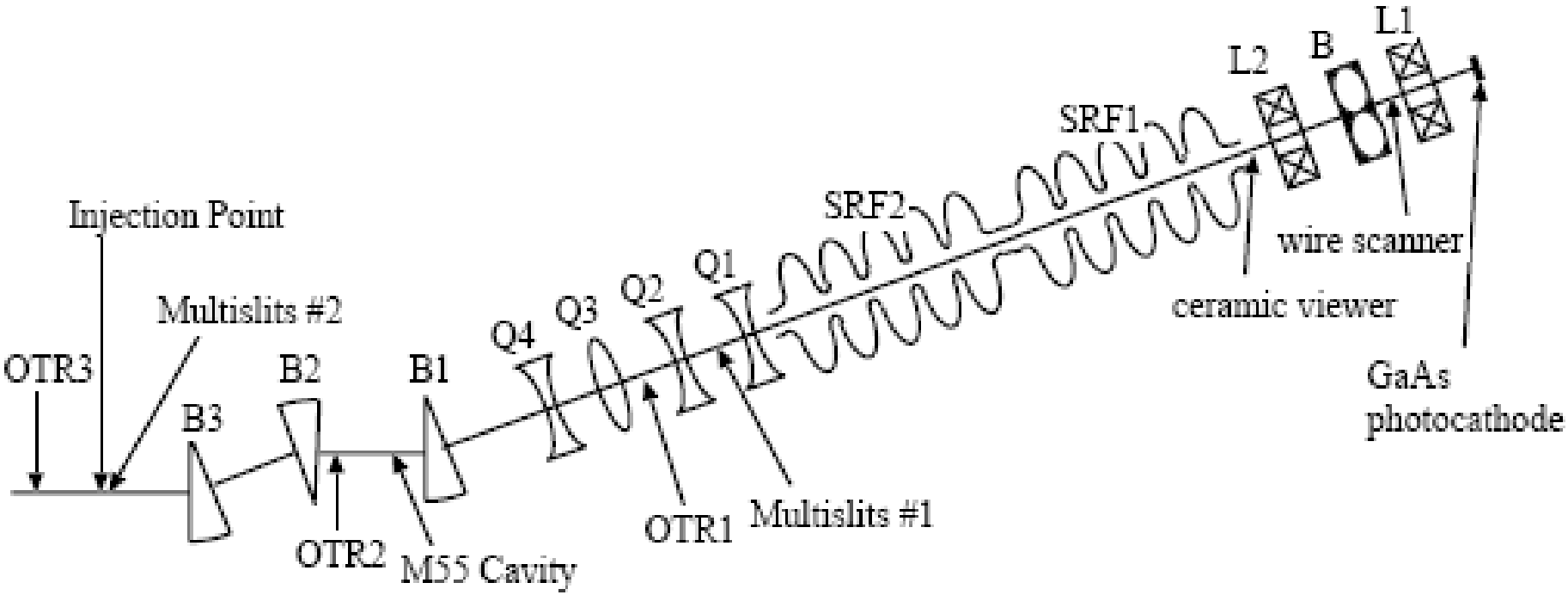

ERL Prototype

Gun Prototype: Verify beam generation

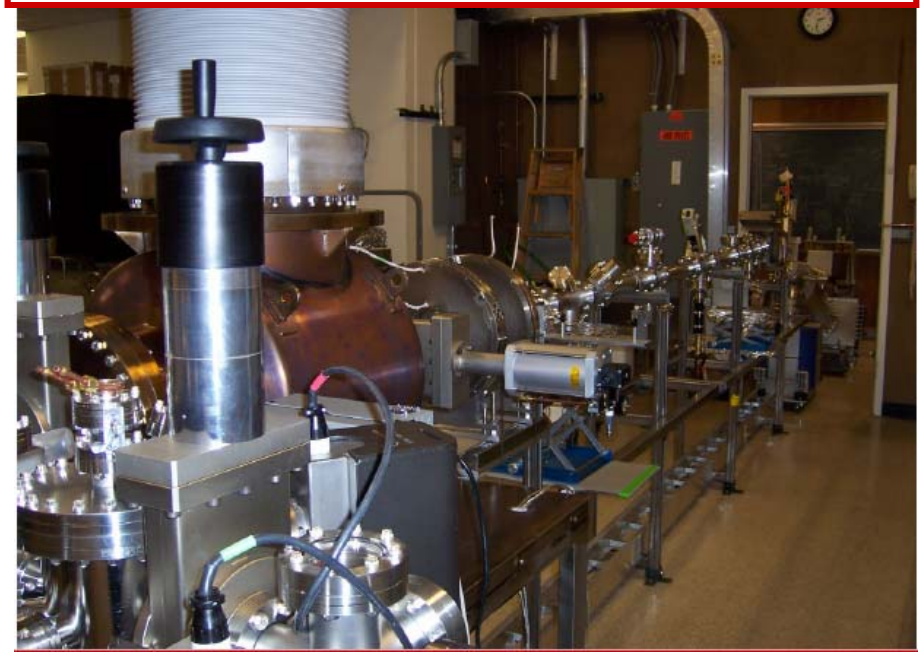

Injector Prototype: Verify beam acceleration

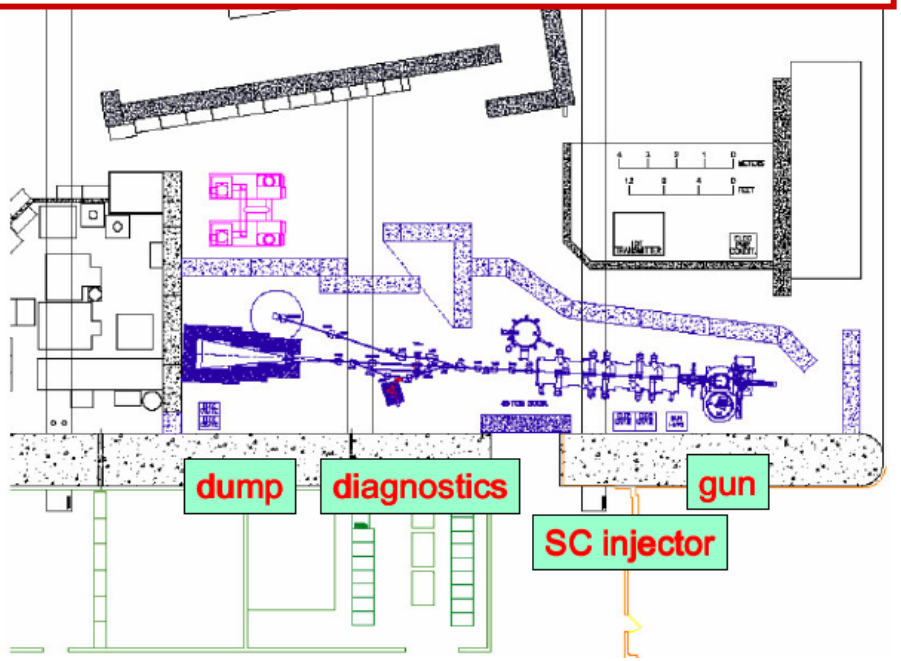

Injector Design Parameters

Beam Energy Range	5 – 15 MeV
Max Average Beam Current	100 mA
Max Bunch Rep. Rate @ 77 pC	1.3 GHz
Transverse Emittance, rms (norm.)	~ 0.1 μm
Bunch Length, rms	2.1 ps
Energy Spread, rms	0.02 %

Courtesy: C. Sinclair
G. Hoffstaetter

DC Photoinjectors under construction/testing

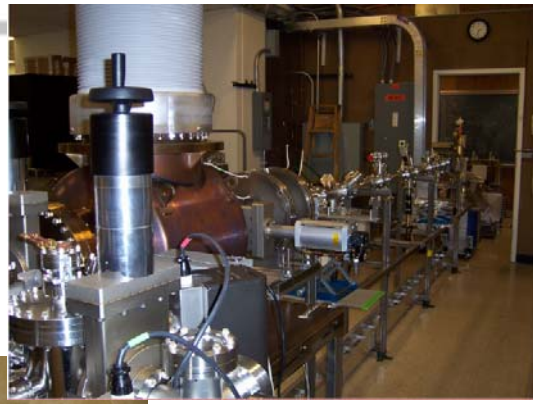

- Cornell:
  500 – 750 kV, 1.3 GHz, 100 mA

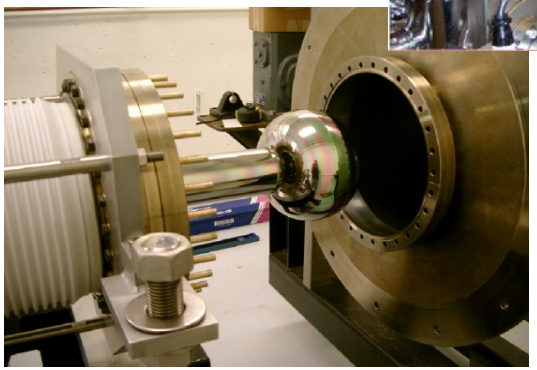

- JLab Gun/AES Injector:
  500 kV, 750 MHz, 100 mA

- Daresbury ERLP:
  Duplicate of JLab FEL gun, 6.5 mA

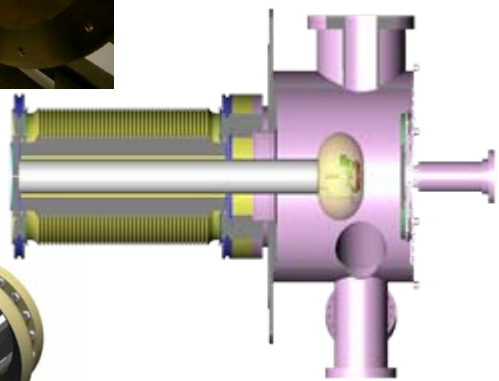

- JAEA:
  250 kV, 50 mA gun,
  superlattice photocathode

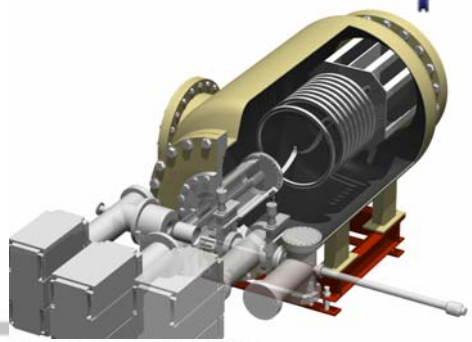

SRF Considerations for a 10-20 mA e-RIBs driver

- RF power sources capable of ~100 kW CW RF power are required.
- Significant amount of CW RF power needs to be transferred to the beam. Input couplers capable of handling high power are required.

RF Power Sources

JLab FEL Injector Klystrons Specs:

- Cathode Voltage - 33.5 kV
- Cathode Current - 6.5 amps
- Power out (saturated) - 112 kW
- Power out (unsaturated) - 102 kW
- Efficiency at saturation - >50.5 %

Under development:

- 150kW, 1.3 GHz klystron for the Cornell ERL Injector.

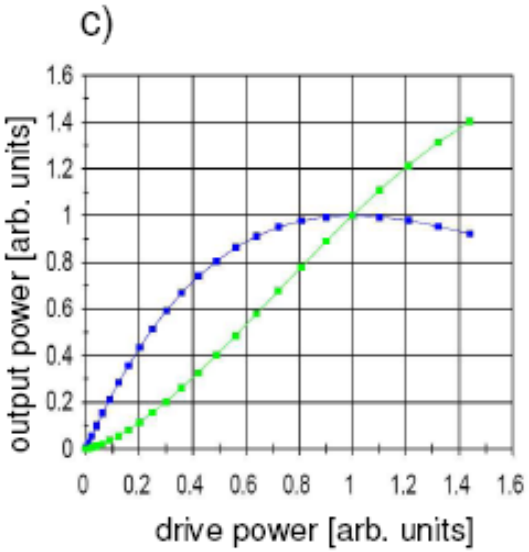

IOTs:

- At 1.5 GHz - None exist at present from any company.
- At 1.3 GHz - Made by several companies. Maximum RF power is ~ 20 kW.
- At ≤ 750 MHz - Made by several companies. Maximum RF power is ~ 80 kW.

Courtesy: R. Walker

RF Input Couplers

Machine	Type	Frequ. [GHz]	Window	Q_{ext}	Max. Power [kW]
LEP2	Coax. fixed	0.352	Cylindrical	2×10^6	CW: 565 (test, trav. wave) CW: 100 (operation)
LHC	Coax. variable (60 mm stroke)	0.400	Cylindrical	2×10^4 to 3.5×10^5	CW: 500 (test, trav. wave) CW: 300 (test, stand. wave)
PEP-II	WG fixed	0.476	Disk WG	7×10^3	CW: 500 (test, trav. wave)
CESR	WG fixed	0.500	Disk WG	2×10^5	CW: 450 (test, trav. wave) CW: 360 (operation)
HERA	Coax. fixed	0.500	Cylindrical	1.3×10^5	CW: 300 (test, trav. wave) CW: 65 (operation)
TRISTAN	Coax. fixed	0.509	Coax. disk	1×10^6	CW: 200 (test, trav. wave) CW: 70 (operation)
KEKB	Coax. fixed	0.509	Coax. disk	7×10^4	CW: 800 (test, trav. wave) CW: 380 (operation)
APT	Coax. variable ($\pm$5 mm stroke)	0.700	Coax. disk	2×10^5 to 6×10^5	CW: 1000 (test, trav. wave) CW: 850 (test, stand. wave)
BNL ERL	Coax. fixed	0.704	Coax. disk	2×10^7	CW: 50 (design)
SNS	Coax. fixed	0.805	Coax. disk	2×10^5	Pulsed: 2000 (test, peak) (7.8% DC: 1.3ms, 60 Hz)
TTF(3)	Coax. variable (17 mm stroke)	1.300	Cylindrical	1×10^6 to 2×10^7	Pulsed: 1800 (TW, 1.3ms, 2 Hz) CW: 4 (test, trav. wave) CW: $>$ 10 (test, TW, air cooled)
Cornell ERL	Coax. variable ($>$ 15 mm stroke)	1.300	Cylindrical	9×10^4 to 8×10^5	CW: 75 (design)
TJNAF FEL	WG fixed	1.500	Planar WG	$< 2 \times 10^7$	CW: 50 (test, trav. wave) CW: 30 (operation)

Courtesy: S. Belomestnykh

HOM Damping

Requirements on HOM damping for 10-20 mA SRF driver for eRIBs are driven by the following effects:

- Average monopole HOM power per cavity:

  $$P_{HOM} = k_{||}\, Q_{bunch}\, I_{ave}$$

  must be kept low and be extracted with good cryogenic efficiency.

  For the eRIBs applications, $P_{HOM} \leq$ a few Watts. No problem!

- If a beam spectrum frequency lines up with a monopole HOM frequency, resonant mode excitation occurs. In this case the power deposited in this mode can be very large, depends on mode quality factor.

  ⇨ Care must be taken to choose cell shape that does not have HOMs that strongly interact with the beam.

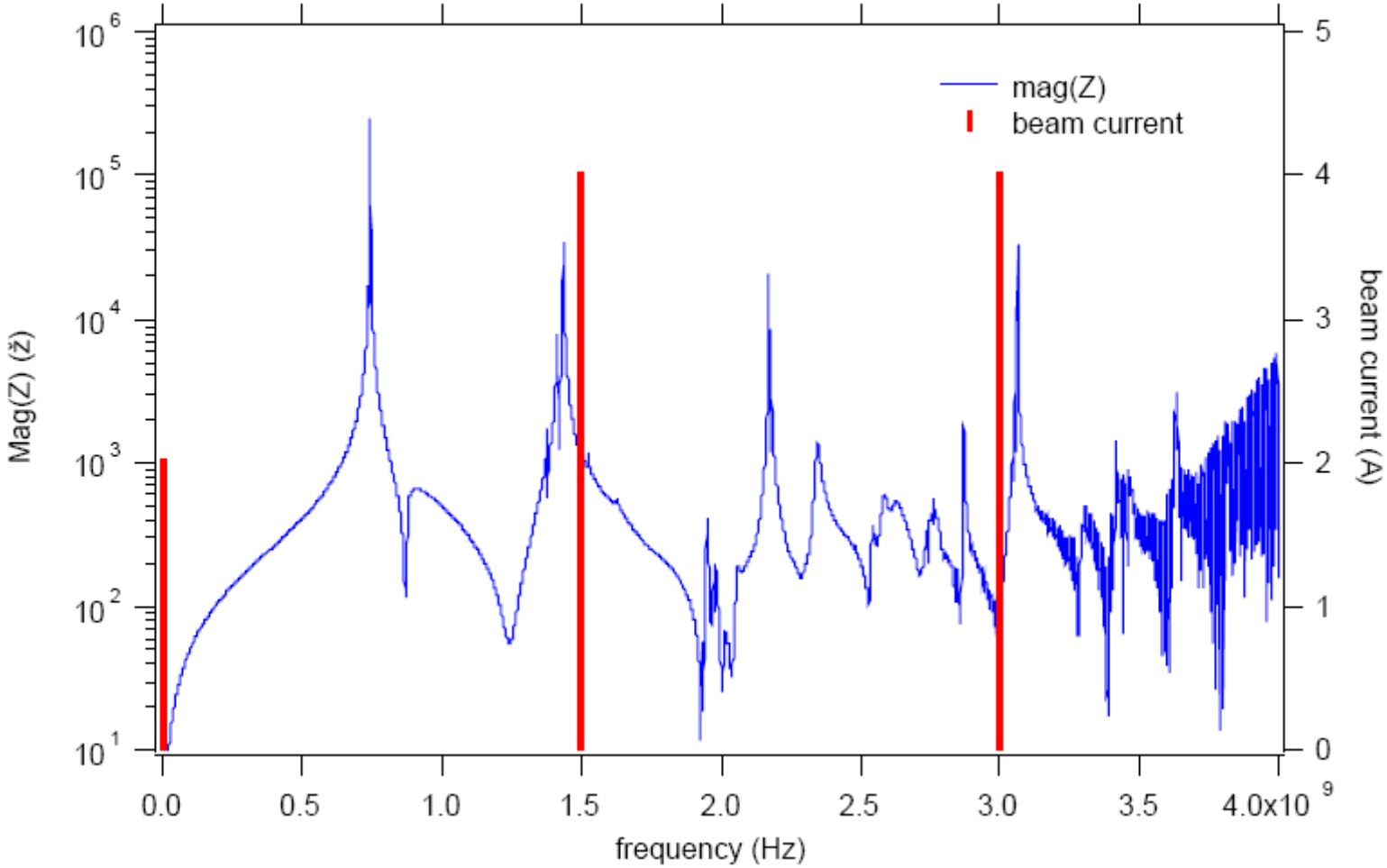
mag(Z)
beam current
Mag(Z) (Ž)
beam current (A)
frequency (Hz)
10^6
10^5
10^4
10^3
10^2
10^1
5
4
3
2
1
0
0.0
0.5
1.0
1.5
2.0
2.5
3.0
3.5
4.0x10^9

Summary

- To optimize the design of an electron driver, one must:

  a) Specify carefully the user requirements:

  Beam energy

  Beam power

  Duty Factor

  Longitudinal and transverse emittance

  b) Evaluate different machine options including capital cost, 10-year operating cost and delivery time.

- I am convinced elegant solutions are available with existing technology.

- There are several design options and technology choices. Decisions will depend on system optimization, in-house infrastructure and expertise (e.g. cryogenics, SRF, lasers), synergy with other programs.