http://www.nnsa.doe.gov/ssaa/Program_overview.htm

National Nuclear Security Administration

Stewardship Science Academic Alliances Program

- Program Overview
- Program Objectives
- Research Areas
- Related Links
- Current Awards
- Grant Application Forms
- New Solicitation NEW
- Contact US
- Home
- *Privacy Disclaimer*

Program Overview

The Stockpile Stewardship Program (SSP) is a scientific approach to ensure the safety, reliability, and performance of the nuclear stockpile in the absence of nuclear testing. The stewardship mission stresses increased fundamental understanding of physical phenomena associated with stockpile performance, safety, and reliability, as well as the preservation and enhancement of core science and technology competencies within the National Nuclear Security Administration/Defense Programs (NNSA/DP) complex. The NNSA/DP Office of Research, Development and Simulation is responsible for developing, maintaining, and integrating all technical and scientific capabilities necessary to execute the Stockpile Stewardship Program. Research activities supporting the SSP are conducted primarily at the three NNSA/DP laboratories: the Lawrence Livermore National Laboratory (LLNL), the Los Alamos National Laboratory (LANL), and the Sandia National Laboratories (SNL) and at several other NNSA-supported organizations: the Nevada Test Site (NTS), the Naval Research Laboratory (NRL), and the University of Rochester Laboratory for Laser Energetics (UR/LLE).

Theoretical Description of the Fission Process

NNSA Grant DE-FG03-03NA00083

Research Areas

Properties of Materials under Extreme Conditions and Hydrodynamics

Research proposals are solicited in the area of fundamental properties and response of materials under extreme conditions and hydrodynamics.

High-Energy-Density Physics

Research proposals are solicited in the area of high-energy-density physics and fluid dynamics, with particular emphasis on experimental investigations based on the utilization of lasers and/or pulsed power technology

Low-Energy Nuclear Science

Research proposals are solicited in the area of nuclear science with an emphasis on low energies. The specific sub-areas of interest are:

- Investigations leading to greater accuracy in the knowledge of low energy cross sections of stable and unstable nuclei and corresponding reaction rates for neutron-, gamma- and ion-induced reactions for both simulation and radiochemistry diagnosis;
- Development of advanced simulations and measurement techniques leading to improved radiation and particle detection methods, in terms of energy and spatial resolution;
- Physics of the fission process, including division of mass and charge as a function of excitation, production of energy, and the reaction properties of prompt fission products;
- Investigations of particle production and advanced diagnostic techniques relevant to high-energy proton radiography and advanced diagnostic techniques relevant to X-ray radiography;
- Development of experimental diagnostic techniques for laser or pulsed power implosion systems.

http://www.phys.utk.edu/witek/fission/fission.html

Theoretical Description of the Fission Process

- home
- project description
- people
- current work
- publications
- talks
- workshops
- links

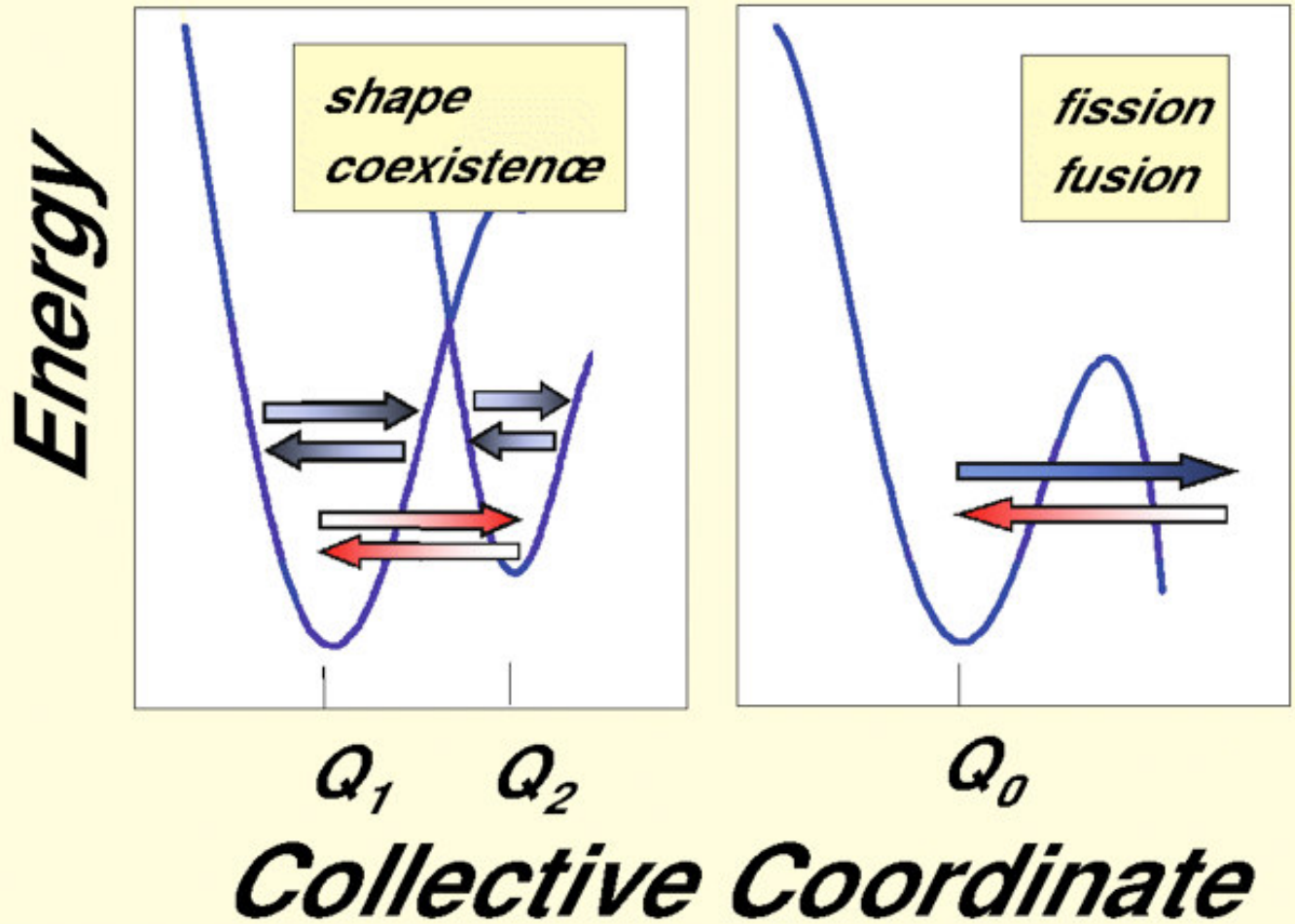

Project supported by the National Nuclear Security Administration under the Stewardship Science Academic Alliance program through Department of Energy research grant DE-FG03-03NA0083.

Theoretical Description of the Fission Process

Workshops

2004 Annual Workshop

On March 17-19, 2004, we held an **International Workshop on the Theoretical Description of the Nuclear Large Amplitude Collective Motion** (with a focus on fission) at the Joint Institute for Heavy Ion Research in Oak Ridge. The workshop was attended by 25 participants and involved five participants from NNSA/DP Laboratories (LANL and LLNL), as well as students and post-docs. The program of the workshop can be found here.

2005 Annual Workshop

The Second International Workshop on the Theoretical Description of the Nuclear Large Amplitude Collective Motion was held March 30 - 31, 2005, at the Joint Institute for Heavy Ion Research, Oak Ridge. The workshop was attended by 21 participants and involved five participants from NNSA/DP Laboratories (LANL, LLNL, NNSA), as well as students and post-docs. The program of the workshop can be found here.

2007 Joint JUSTIPEN-LACM Workshop

The Joint JUSTIPEN-LACM Meeting was held March 5-8, 2007 in the Joint Institute for Heavy Ion Research (JIHIR) at Oak Ridge National Laboratory. The meeting was a merger of two workshops: (i) the US-Japan theory meeting under the auspices of the Japan-US Theory Institute for Physics with Exoctic Nuclei (JUSTIPEN) and (ii) the annual NNSA-JIHIR meeting on the nuclear large amplitude collective motion (LACM) with an emphasis on fission. The workshop was attended by 60 participants and involved three participants from NNSA/DP Laboratories (LANL, NNSA), as well as students and post-docs. The program of the meeting can be found here.

2008 Joint LACM-EFES-JUSTIPEN Workshop

The Joint LACM-EFES-JUSTIPEN Meeting will be held January 23-25, 2008, in the Joint Institute for Heavy Ion Research (JIHIR) at Oak Ridge National Laboratory. The meeting is a merger of two workshops: (i) the US-Japan theory meeting under the auspices of the Japan-US Theory Institute for Physics with Exoctic Nuclei (JUSTIPEN) and (ii) the annual NNSA-JIHIR meeting on the nuclear large amplitude collective motion (LACM) with an emphasis on fission. The program of the meeting can be found here.

Nuclear Science Applications

Medical Diagnostics and Therapy Radiography Computerized tomography Positron emission tomography MRI (regular) MRI (with polarized noble gases) Photon therapy Particle-beam therapies	**Material Analysis** Activation analysis Accelerator mass spectrometry Atom-trap trance analysis Forensic dosimetry Proton-induced x-ray emission Rutherfold backscattering Ion-induced secondary-ion emission Muon spin rotation
Safety and National Security Airport safety and security Large-scale x-ray scanners Nuclear materials detection Arms control and nonproliferation Stockpile stewardship Tritium production Space-radiation health effects Semi-conductor performance in radiation environments Food sterilization	**Environmental Applications** Climate-change monitoring Pollution control Groundwater monitoring Ocean-current monitoring Radioactive-waste burning
Energy Production and Exploration Nuclear reactors Oil-well logging R&D for next generation nuclear reactors **Art and Archaeology** Authentication Nuclear dating	**Materials Testing and Modification** Trace-isotope analysis Ion implantation Surface modifications Flux-pinning in high-T_c superconductors Free-electron lasers Cold and ultra-cold neutrons Single-event efforts Microphone filters

LRP'07 report

Relevance… Addressing national needs

Advanced Fuel Cycles

- neutron-reaction cross sections from eV to 10 MeV
- the full range of (n,f), (n,n'), (n,xn), (n,γ) reactions
- heavy transuranics, rare actinides, and some light elements (iron, sulfur)
- Quantified nuclear theory error bars
- Cross sections input to **core reactor simulations** (via data evaluation)
- BETTER CROSS SECTIONS AFFECT both SAFETY and COST of AFC reactors.

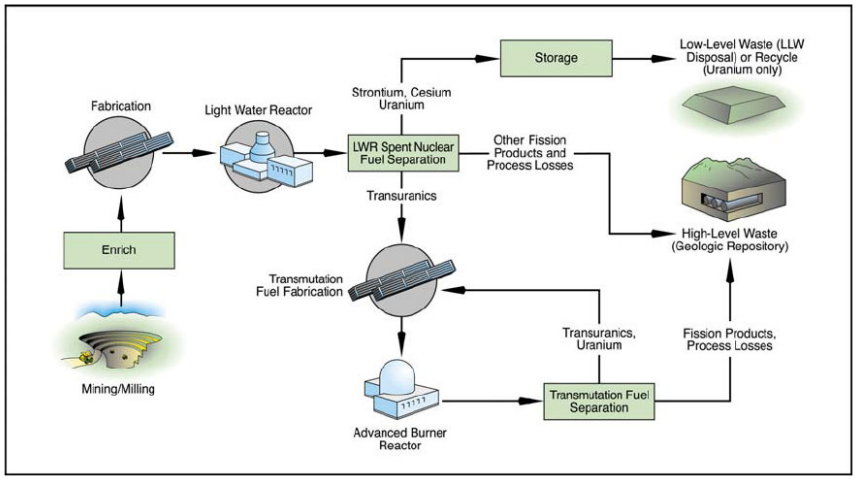

Science Based Stockpile Stewardship

- Radiochemical analysis from days of testing: inference on device performance shows final products but not how they came to be.
- Typical example Yttrium charged particle out reaction. LESS THAN 10% of cross sections in region measured.
- Theory with quantifiable error bars is needed.

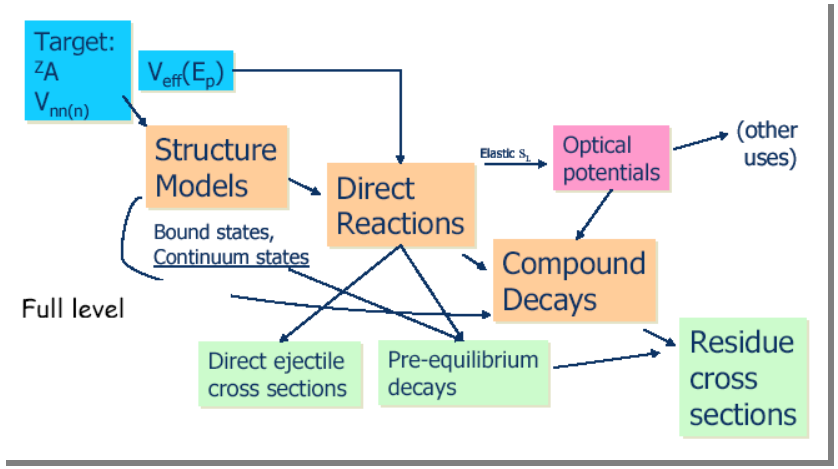

Stewardship Center at HRIBF

Fission is a fundamental many-body phenomenon that possess the ultimate challenge for theory

Understanding crucial for many areas:

- Nuclear structure and reactions (superheavies)
- Astrophysics (n-rich fission and fusion, neutrino-induced fission)
- Numerous applications (energy, AFC, Stockpile Stewardship…)
- …

The light in the end of the tunnel: coupling between **modern microscopic many-body theory** and **high-performance computing**