A NEUTRINO DETECTOR FACILITY AT THE SPALLATION NEUTRON SOURCE AT OAK RIDGE NATIONAL LABORATORY

T. Awes, V. Cianciolo, Y. Efremenko, Yu. Kamyshkov,* A. Mezzacappa, F. Plasil*

The Spallation Neutron Source (SNS) [1] presently under construction at ORNL will be the world's most powerful source of neutrinos. Two almost identical liquid mercury spallation target stations, resulting in point-like neutrino sources, and the short-pulse time structure of the machine will create a unique opportunity for a neutrino oscillation search and for other studies of neutrino-induced reactions. The ORLaND collaboration [2, 3] was formed to propose, develop, build, and operate the large neutrino facility at the SNS. The physics opportunities are described in subsequent articles in this report.

The neutrino facility will be located in an underground bunker, as shown in Fig. 1 and Fig. 2, in between the two target stations and closer to the first one. (Note: only one beam line and target area are shown.) The underground location of the bunker will ensure minimal interference with the main SNS construction and operation and will provide sufficient shielding against cosmic rays and fast neutron background. A slurry-wall technique for the bunker construction will eliminate any impact on the integrity of the SNS building foundation and make the construction schedules of target station and the bunker flexibly independent. The bunker will be designed to provide sufficient space for one large and one or two small-size detectors, for control rooms and services, and for an assembly area.

There will be four mezzanine levels within the cylindrical bunker structure. The top mezzanine (35 ft below the surface level) will be used as the receiving and staging area. There will be a rotating overhead bridge crane to load and unload equipment and materials from transportation vehicles arriving through the access tunnel. All floors will have removable grating to facilitate transfer of large equipment and materials from the top level to the lower level mezzanines.

The large, 2-kton, nonsegmented ORLaND detector, optimized for the search for neutrino oscillations and for electroweak theory tests, will use the largest volume of the bunker. Small, highly segmented detectors optimized for the nuclear and astrophysics programs can be located on the side of the large detector, on the second or third mezzanine levels.

The proposed, large, nonsegmented scintillation-Cerenkov detector is a vertical cylindrical tank with internal dimension ($r = 7.2$ m; $h = 14.3$ m) lined with 6730, 20-cm-diameter photomultiplier tubes that cover about 25% of the total area. The detector is shown schematically in Fig. 3. The designed fiducial volume will contain 1540 metric tons of mineral oil scintillator. The detector will be surrounded by a passive shield and an active veto system.

The segmented detector design concept will utilize a liquid scintillator cell of $\sim 10 \times 10 \times 10$ cm^3 size with the inner walls coated with white diffusing reflector. The 1-mm-diameter wavelength shifting fibers (WLSF) located along the length of the cell intercept the scintillation and Cerenkov light and re-emit it in the wavelength range at which WLSF is most transparent. The WLSFs will be placed along the vertical fiber plane surfaces with a fiber-to-fiber distance of approximately 1 cm. Fiber plane-to-plane distance is $\sim$ 10 cm. Each WLSF will run the length of the fiber plane vertically from the top to the bottom, loop around the bottom of the fiber plane, then run back up to the top. The U-shaped loops at the bottom will be blackened. A PMT is attached to the end of the WLSF to collect the light (Fig. 4).

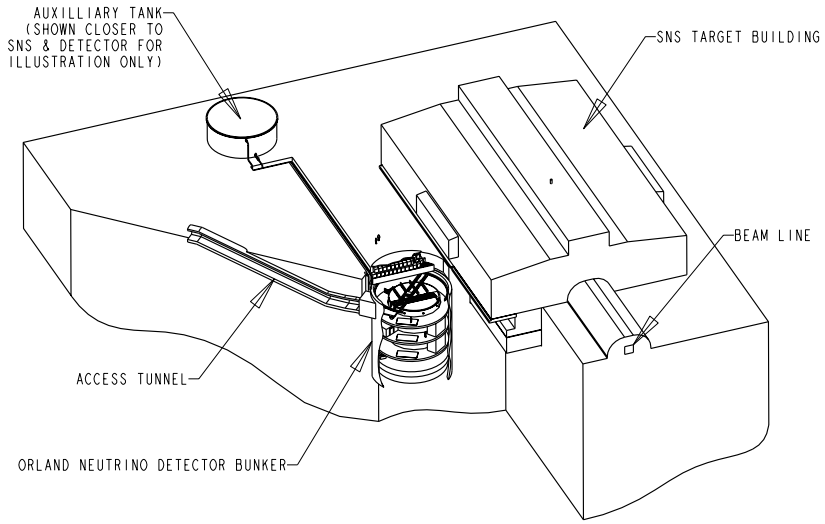

Figure 1: Position of neutrino facility bunker near the SNS first target station.

The segmented structure of the small detector is envisaged in such a way that the target planes of different materials might be inserted between the detection planes of the detector. This will allow measurement of the cross sections for neutrino interactions with various elements.

The ORLaND Collaboration is presently preparing a proposal for submission to the U.S. Department of Energy [3].

---

* Guest assignee, University of Tennessee, Knoxville.

[1] The NSNS Collaboration, May 1997, National Spallation Neutron Source *Conceptual Design Report*, Vol. 1 and 2, ORNL, Oak Ridge, Tennessee.

[2] W. Bugg et al., *Prospects for a Neutrino Oscillation Experiment at the National Spallation Neutron Source*, in Proceedings of the 6th Conference on the Intersections of Particle and Nuclear Physics, Big Sky, Montana (1997).

[3] B. D. Anderson, F. Avignone et al., *A Large Neutrino Detector Facility at the Spallation Neutron Source in Oak Ridge National Laboratory*, Proposal to U.S. Department of Energy (in preparation).

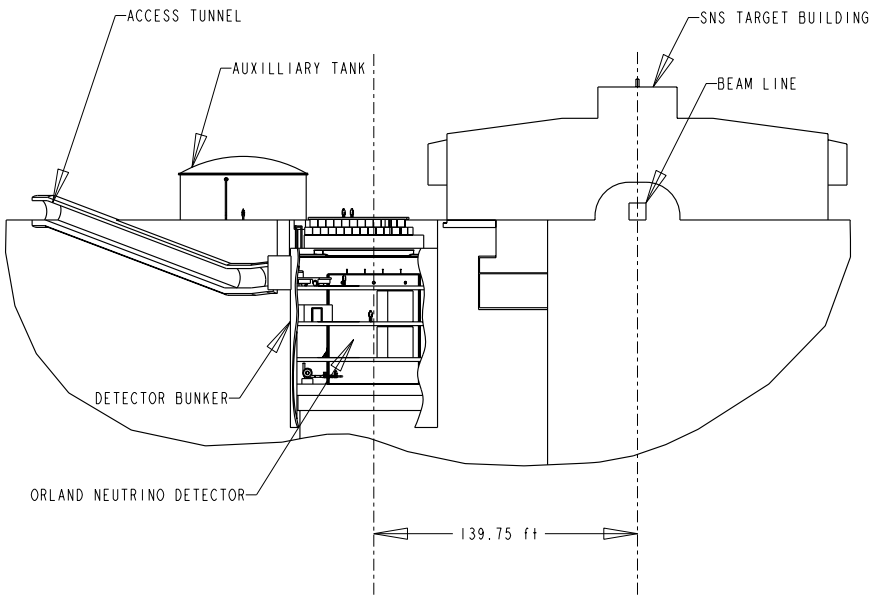

Figure 2: Elevation view of the neutrino facility bunker.

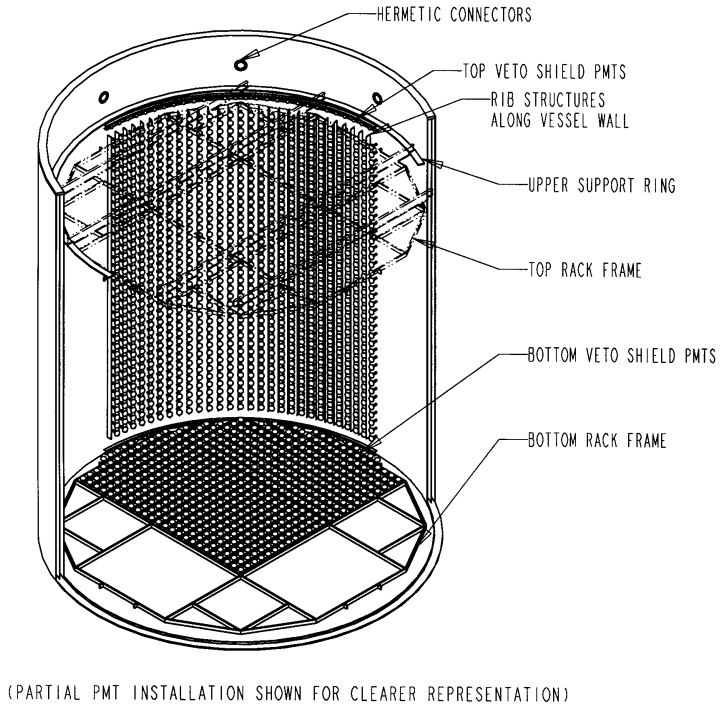

Figure 3: Schematic view of the large ORLaND Detector showing the PMT arrangement on the detector walls.

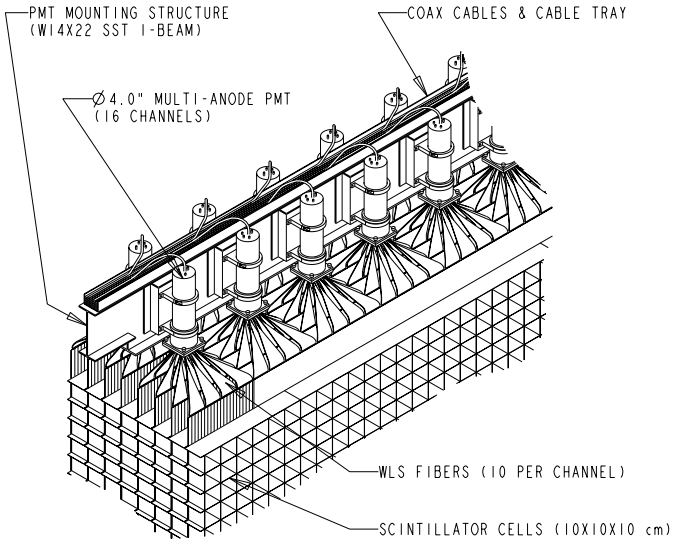

Figure 4: Schematic view of the top part of the small segmented detector arrangement.