A HIGH-INTENSITY, RF PLASMA-SPUTTER NEGATIVE ION SOURCE

G. D. Alton, R. Lohwasser,[i] B. Cui,[ii] Y. Bao,[2] T. Zhang,[2] S. N. Murray, G. D. Mills

A high-intensity, plasma-sputter negative ion source based on the use of RF power for plasma generation has been developed and extensively characterized that can be operated in either pulsed or dc modes. The source can be used for generating a variety of stable negative ion beams for typical tandem accelerator and potentially for tandem/synchrotron injection applications. It also offers the prospect of use for batch-mode generation of radioactive ion beams for injection into tandem electrostatic accelerators for post acceleration because of the perfect over-lap of the plasma particles that sputter the sample and the area of the sample irradiated by the production beam. Plasma-sputter negative ion sources based on the use of the hot cathode to sustain the discharge have limited lifetimes due to the erosion of the cathode by the discharge. The use of RF power for plasma ignition, in principle, overcomes this handicap, reduces the complexity of operation and lowers overall source maintenance. The source, illustrated schematically in Fig.1, utilizes a high-Q, self-igniting, inductively coupled antennae system, operating at 80 MHz, that has been optimized to generate Cs-seeded plasmas at low pressures (typically, < 1 mTorr for Xe).[iii] The source is equipped with a spherical-sector cathode machined from the desired material. The size of the cathode can be varied up to 25.4 mm in diameter, thus permitting scaling of intensities as required for the particular application. During testing of the source, the data were taken with a 19-mm diameter cathode. Since the sputter negative-ion formation process depends exponentially on the difference between the electron affinity of the species of interest and the value of the work function of the surface, and Cs vapor is very effective in lowering the work functions of surfaces, Cs is fed into the Xe supported discharge at a controlled rate. The sputtering process is effected by accelerating Xe^+ particles extracted from the plasma, to the negatively biased, spherical-sector sample. The plasma forms a double layer that surrounds and exactly conforms to the shape of the negatively biased sputter sample. Particles extracted from the plasma uniformly bombard the sputter sample at energies typically between 500 and 2000 eV, depending on the sputter-sample voltage required to generate the desired intensity. The interface between the spherical sector geometry sample and the plasma forms a spherical-geometry lens system that focuses convergent negative ion beams through a 4-mm diameter extraction aperture, located at a distance equal to the radius of curvature (50 mm) of the sample. This geometry minimizes aberrations and reduces

Cs^o vapor and Xe gas flow from the source while ensuring efficient ion extraction from the source. To date, the source has been utilized to generate dc negative ion beams from a 19-mm diameter spherical sector cathode for a variety of species, including: C^- (610 μA); F^- (100 μA); Si^- (500 μA); S^- (500 μA); P^- (125 μA); Cl^- (200 μA); Ni^- (150 μA); Cu^- (230 μA): Ge^- (125 μA); Se^- (50 μA); Ag^- (70 μA); Au^- (250 μA); Pt^- (125 μA). The normalized emittance ε_n of the source at the 80% contour is: ε_n = 7.5 mm.mrad.(MeV)$^{1/2}$.

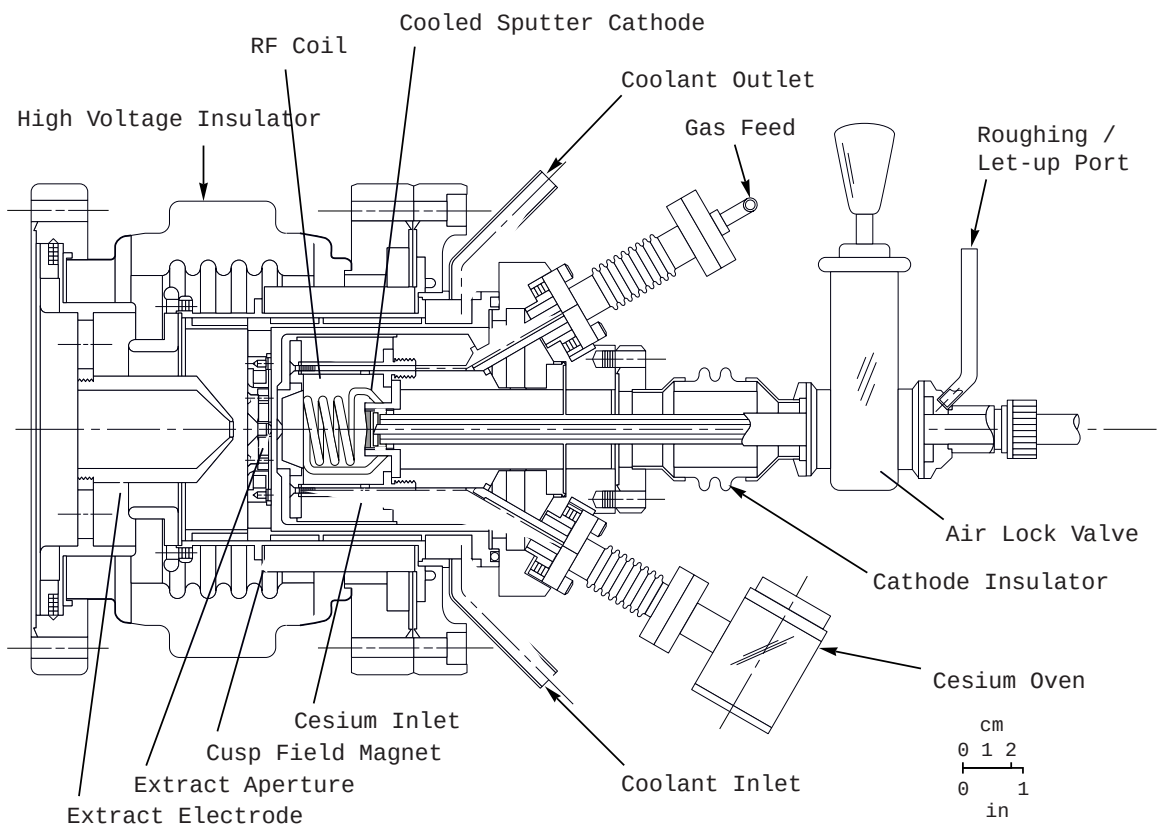

Fig. 1. Schematic drawing of the RF plasma-sputter negative ion source.

---

[i] Ludwig Maximiliams Univeristät, München, Germany.

[ii] China Institute of Atomic Energy, Beijing, China.

[iii] R. Lohwasser, "High Efficiency RF Plasma Generation Systems for Ion Source Applications," Diploma Thesis, Department of Physics, Ludwig Maximilians Universität, München, Germany, June 1997.