# HIGH-EFFICIENCY RF PLASMA GENERATION SYSTEMS FOR ION SOURCE APPLICATIONS

R. Lohwasser,[1] G. D. Alton and S. N. Murray

The material represented in this report were taken from studies conducted as a part of a Diploma Thesis by one of the authors with the principal objective of designing matching-networks and high-Q antennae for efficient coupling of 80 MHz RF power for both positive and negative ion source applications.[2] The RF generator/matching-network/antenna system used for this purpose is symbolically represented in Fig. 1. A plasma diagnostic facility was constructed for measuring the properties of plasmas generated by use of antenna systems under development for these applications. The plasma density may vary several orders of magnitude during start-up and operation of an ion source, thus causing an impedance mismatch that necessitates the insertion of a tunable impedance matching network between the RF generator and antenna system. For optimum power transfer without reflection, the impedance of the RF power supply, matching network and antenna system must satisfy the following relations: $Z_{gen} = Z_{in}$ and $Z_{out} = Z_{ant}$. Ranges of capacitance values for the source capacitor and load capacitor and fixed value for the network inductance were determined by plotting their respective values as function of a free parameter; the magnitudes of the respective components were then determined by arbitrarily assigning a value to the parameter. The $\pi$-matching-network, schematically represented in Fig. 2, was constructed and installed in close proximity to the antenna used to couple power into the plasma during source operation. The physical properties of spiral-wound antennae with variable diameter, pitch and number of turns allows these parameters to be adjusted for fine-tuning to resonance conditions. Several spiral geometry antenna, wound from 3-mm diameter Cu tubing, were evaluated by measuring the densities of their self-ignited plasmas by use of a Langmuir probe placed within a vacuum chamber identical in size to that of the application source. For positive ion source applications, high plasma densities are desirable in which case small radii coils with large number of turns and as long as practical are preferred. In contrast, low plasma densities are required for negative ion source applications because of the large cross-sections for electron detachment at pressures in excess of 10 mTorr, in which case, larger diameter coils with fewer numbers of coils are desirable. Optimized antennae for positive- and negative-ion source applications are displayed in Fig. 3. The antennae are coated with a thin layer of porcelain to prevent sputtering of the copper coil during operation; the porcelain does

not change the characteristics of the antenna and is flexible enough to allow changes in turn-to-turn spacing required for fine tuning to the desired resonant frequency (80 MHz). These antenna have been used to generate both positive- and negative-ion beams.

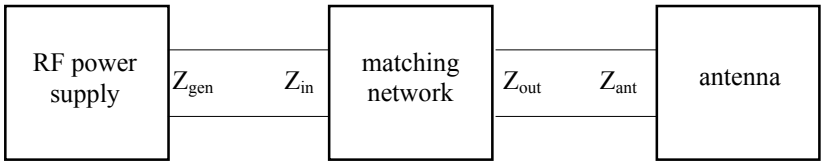


Fig. 1 Symbolic representation of the RF-coupling system used in developing antennae for positive and negative ion source applications.

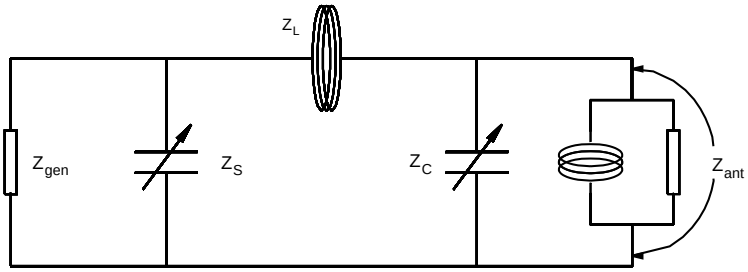


$Z_S$ : impedance of source capacitor
$Z_{gen}$: impedance of RF power supply
$Z_L$ : impedance of inductive coil
$Z_{ant}$: impedance of antenna
$Z_C$ : impedance of load capacitor

Fig. 2. Electrical diagram of the $\pi$-matching-network used in optimizing coupling of RF power to plasmas.

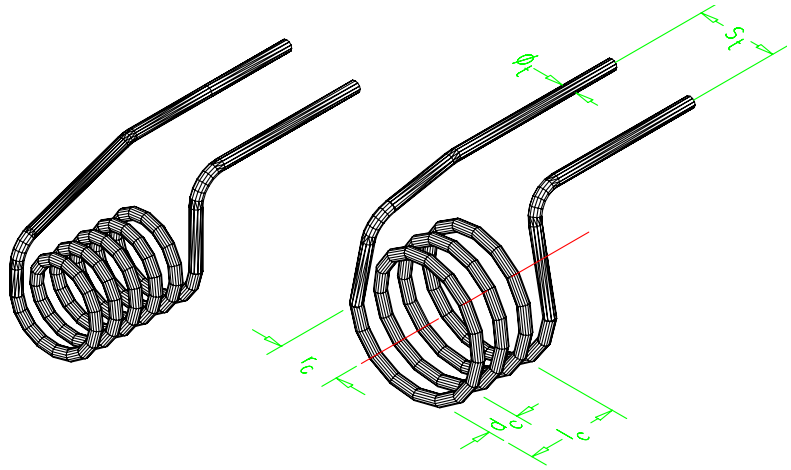


Fig. 3. Isometric drawing of the optimized antennae for the negative and positive ion source applications. The parameters for the antenna for the respective applications are:
Positive: $r_c$(mm) = 9.5; n = 5; $d_c$(mm) = 7.4; $l_c$(mm) = 37; $S_t$(mm) = 25.4; $ø_t$(mm) =3
Negative: $r_c$(mm) = 21; n = 4; $d_c$(mm) = 7.25; $l_c$(mm) = 29; $S_t$(mm) = 25.4; $ø_t$(mm) = 3

---

[1] Ludwig Maxmilians Univeristät, München, Germany.
[2] *"High Efficiency Rf Plasma Systems For Ion Source Applications,"* R. Lohwasser, Diplom Thesis, Dept. Of Phys. Ludwig Maxmilians Univeristät, München, Germany, June 1997 (Unpublished)