A HIGH EFFICIENCY, KINETIC-EJECTION NEGATIVE ION SOURCE FOR RIB GENERATION

G. D. Alton, Y. Liu, C. Williams,[1] and S. N. Murray

Delay-times associated with the diffusion and effusive–flow processes are the principal factors that limit RIB intensities at ISOL-type facilities such as the HRIBF. In on-line experiments at the HRIBF, the diffusion limiting problem for $^{17,18}F$ has been satisfactorily solved through the use of small dimensioned Al_2O_3, ZrO_2 and HfO_2 fibrous target materials where the most likely release products are in the form of stable, volatile oxy-fluorides or metal mono-fluorides [1] as confirmed by both on- and off-line testing of the electron-beam-plasma ion source (EBPIS). In particular, AlF is the principal transport agent for F whenever Al_2O_3 or HfO_2 are used as target materials. Since AlF is gaseous at all temperatures between ~ 20 K and 1673 K, the on-set for thermal dissociation under high-vacuum conditions, the molecule quickly passes through the source and, thus, essentially solves the effusive-flow problem for these species. However, this molecule is not efficiently dissociated and ionized with the EBPIS traditionally used at the HRIBF for positive ion generation and the species of interest is distributed among several mass channels thereby diluting the intensity of the species of interest. Since the HRIBF relies on the 25-MV tandem accelerator for propelling beams to research energies, this problem is exacerbated because of the necessity of charge-exchange conversion of the positive-ion beam.

The kinetic-ejection negative-ionization mechanism offers an efficient and direct means for simultaneously dissociating molecules and rather efficiently, negatively ionizing species with intermediate to high electron affinities. Therefore, we have conceived, designed, fabricated, and extensively evaluated an efficient kinetic-ejection negative-ion source for generating $^{17}F^-$ and $^{18}F^-$ beams, as well as other high electron affinity species that overcomes these handicaps. The source, shown on Fig. 1, utilizes Cs^+ beams, produced by surface ionization, to bombard condensable compounds containing fluorine that eminate from RIB target materials such as Al_2O_3 and are adsorbed onto the cooled inner surface of a conical-geometry cathode after transport from the target. The energetic Cs^+ very effectively dissociates fluorine-rich compounds, formed by reactions of SF_6 with fibrous Al_2O_3 material, and negatively ionizes atomic F^o at a nominal efficiency of 5% – 7% during the kinetic ejection process. The mass spectrum extracted from the source is simple with essentially 100% of the F^- in the atomic mass channel, in contrast to its hot-cathode EBPIS positive counterpart where

typically 13% of the F^+ is found to reside in the atomic mass channel. According to on-line measurements, the ^{17}F beam intensities are expected to exceed those derived by use of the EBPIS, in combination with charge exchange, by a factor of at least 10. The normalized emittance, ε_n, of the source is ~ 6.8 mm.mrad $(MeV)^{1/2}$ at the 80% contour level. The source operates very stably and reliably without the need for constant operator attention and has, to date, demonstrated a continuous operational lifetime in excess of one month.

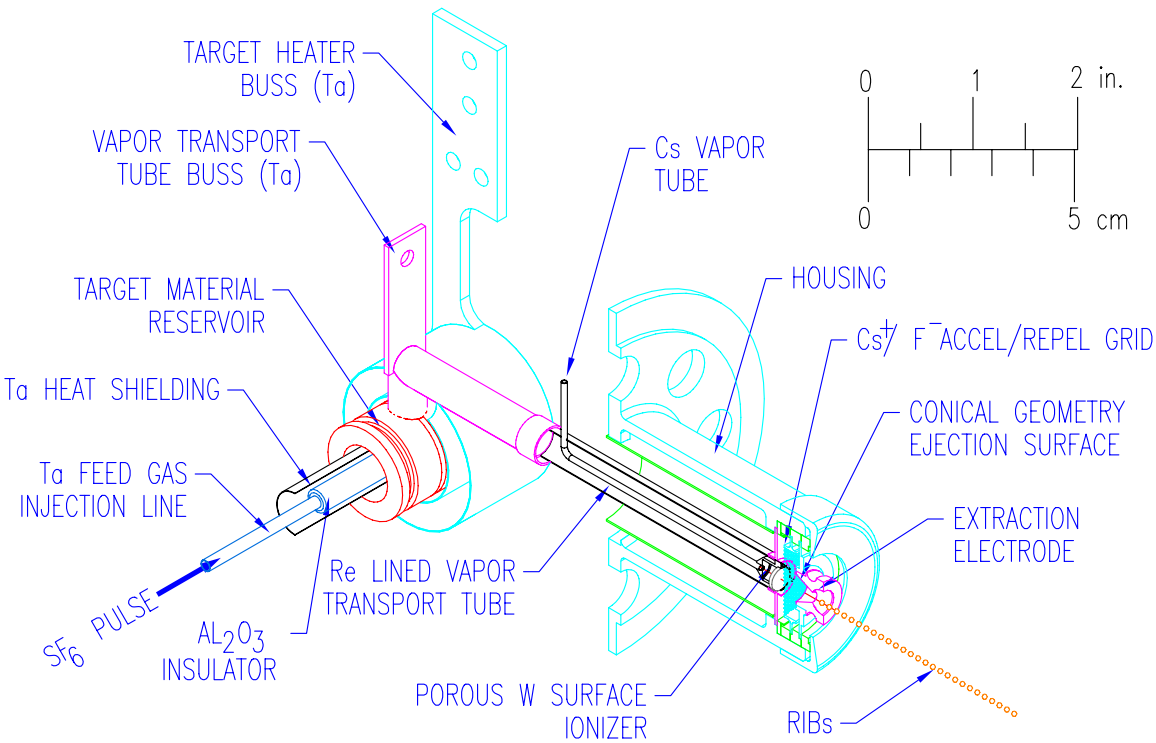

Fig. 1. Isometric cut-away-drawing of the kinetic ejection negative ion source.

[1] Oak Ridge Institute for Science and Education, Oak Ridge, TN.