Neutron Lifetime via Trapped UCN

K. J. Alvine, C. R. Brome, J. S. Butterworth,
S. N. Dzhosyuk, C. E. H. Mattoni, R. A. Michniak,
D. N. McKinsey, L. Yang and J. M. Doyle
Harvard University

P. R. Huffman, A. K. Thompson and G. L. Yang
NIST, Gaithersburg

K. J. Coakley
NIST, Boulder

R. Golub
HMI, Berlin

S. K. Lamoreaux
Los Alamos National Laboratory

Neutron Beta Decay

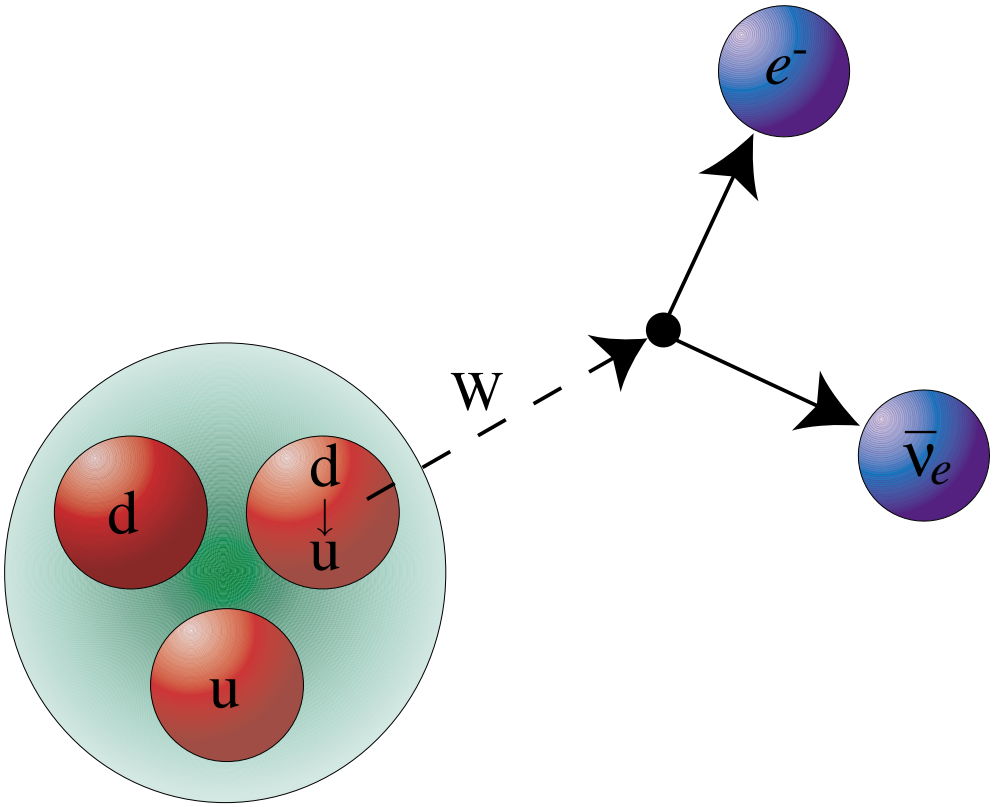

$$n \rightarrow p^{+} + e^{-} + \overline{\nu}_e + 782 \text{ keV}$$

Why Study the Neutron?

The Standard Model

CKM Unitarity

$$\begin{pmatrix} d' \\ s' \\ b' \end{pmatrix} = \begin{pmatrix} V_{ud} & V_{us} & V_{ub} \\ V_{cd} & V_{cs} & V_{cb} \\ V_{td} & V_{ts} & V_{tb} \end{pmatrix} \begin{pmatrix} d \\ s \\ b \end{pmatrix}$$

Big Bang Nucleosynthesis

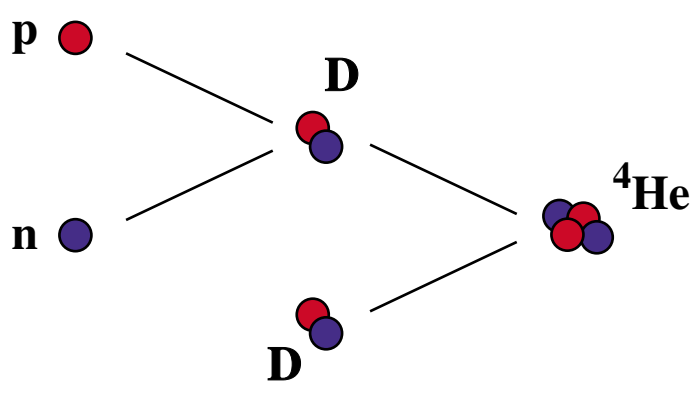

Goals

- Magnetic Trapping of Neutrons

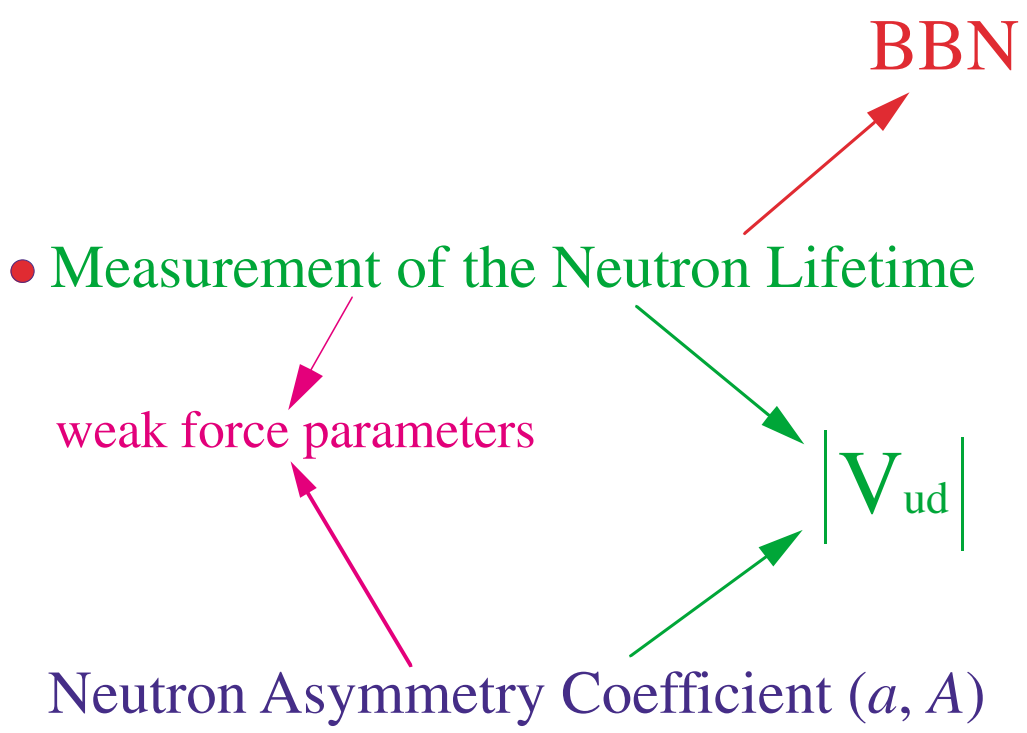

Previous Neutron Lifetime Measurements

Fill and Dump

Material Walled Bottle

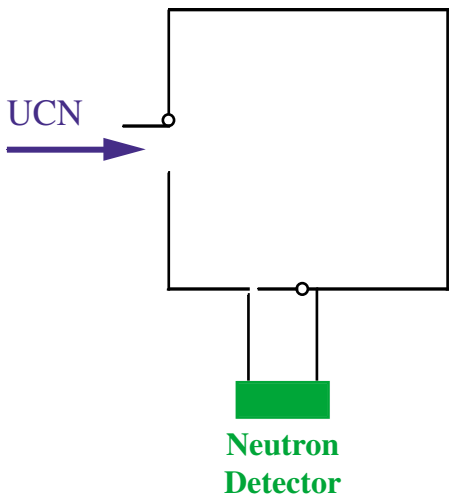

$\tau_n = 885.7\ s \pm 1.0\ s$
(wall losses)

Magnetic Storage Ring

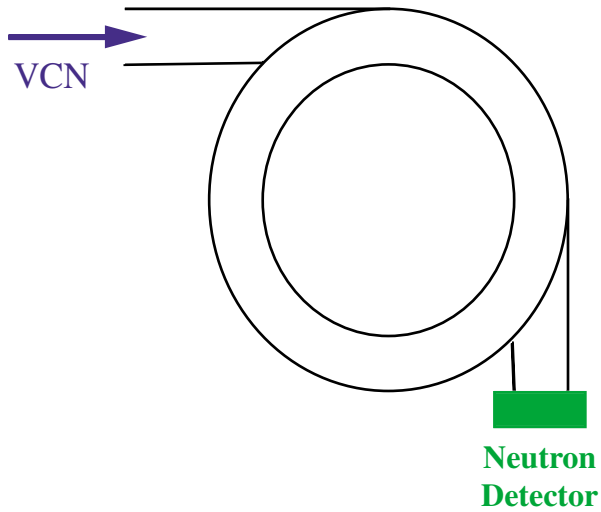

$\tau_n = 877\ s \pm 10\ s$
(betatron oscillations)

Beam

$\tau_n = 889.2\ s \pm 4.8\ s$
(flux measurement)

Magnetic Trapping of UCN

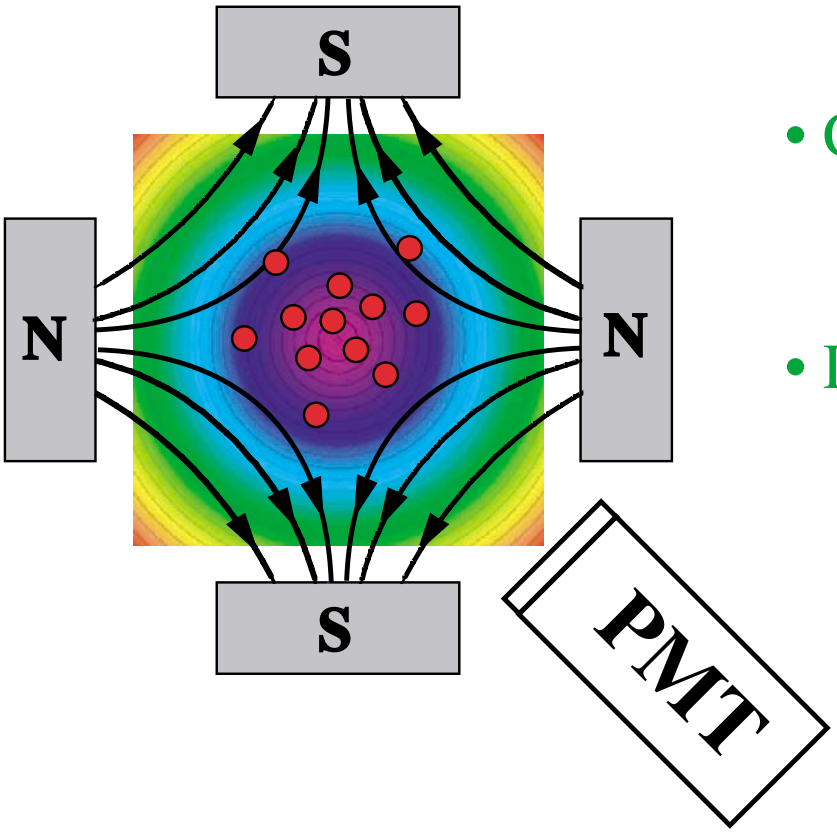

- Produce UCN using superthermal scattering
- Confine UCN with a magnetic trap
- Detect UCN by measuring beta-decay rate as a function of time.

Why Trap?

- Longer interaction times
- Eliminates systematic effects present in previous experiments

NIST Center for Neutron Research

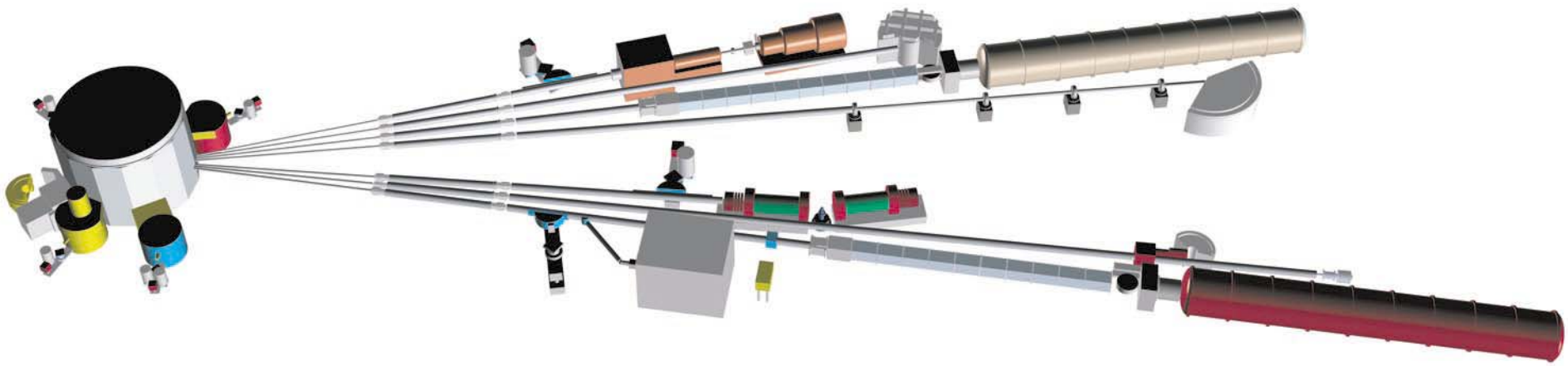

- 20 MW split-core research reactor
- Liquid hydrogen cold source
- Eight cold neutron guides, one for fundamental physics
- 1×10^9 n/cm^2/s at end of fundamental physics guide

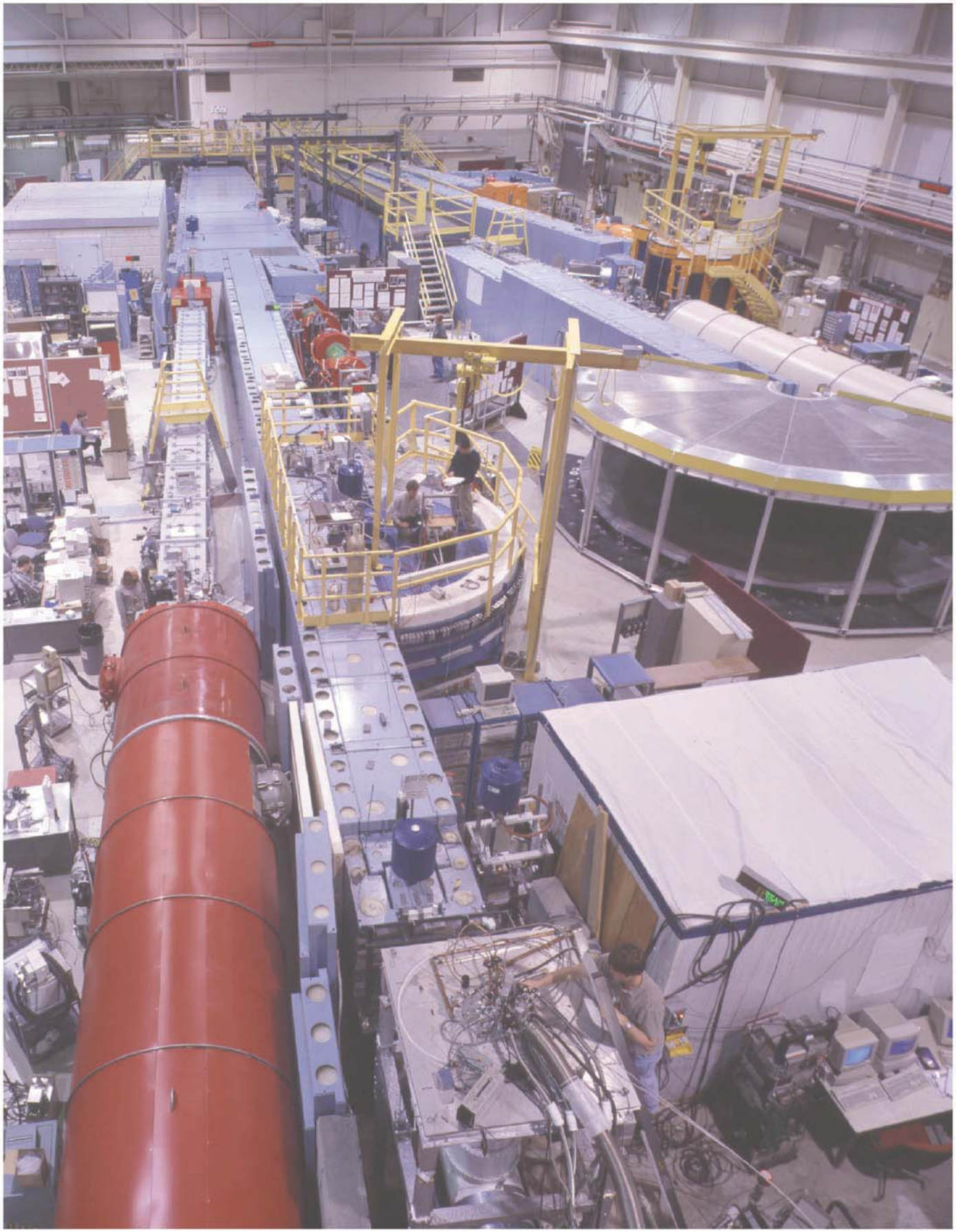

NIST

P. R. Huffman

Magnetic Trapping

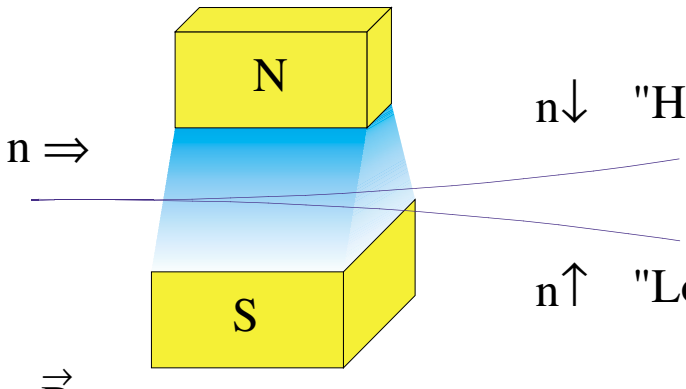

n↓ "High Field Seekers"

$F = \nabla (\vec{\mu} \cdot \vec{B})$

n↑ "Low Field Seekers"

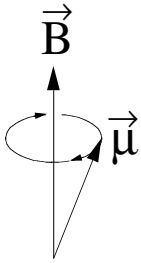

$$\frac{d\vec{\mu}}{dt} = \gamma \hat{\mu} \times \vec{B}$$

Larmor Frequency γB

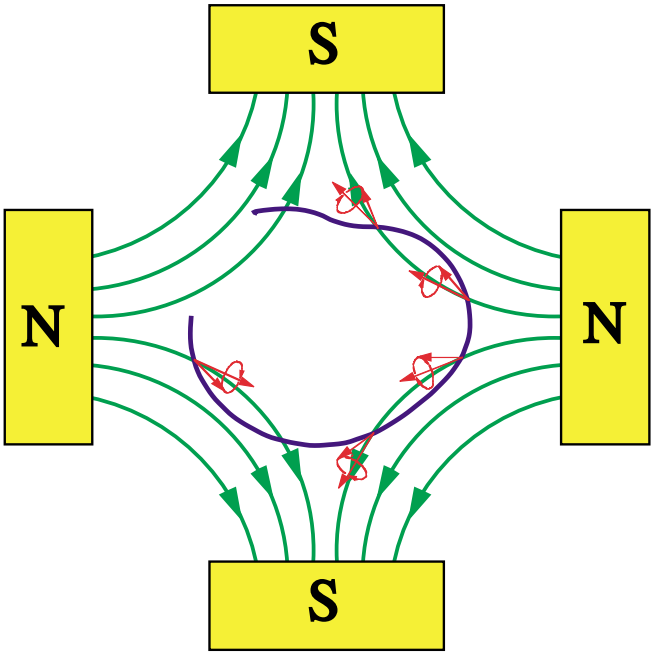

Spin follows magnetic field if $\gamma B >> \frac{\frac{dB}{dt}}{B}$

Ioffe-Type Magnetic Trap

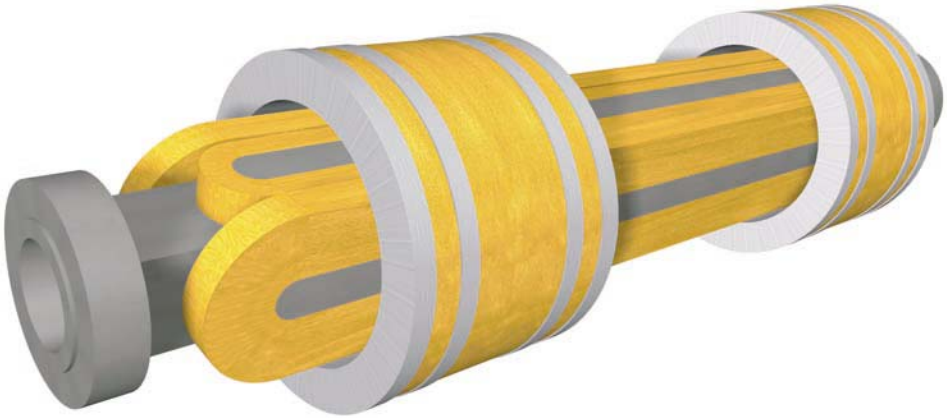

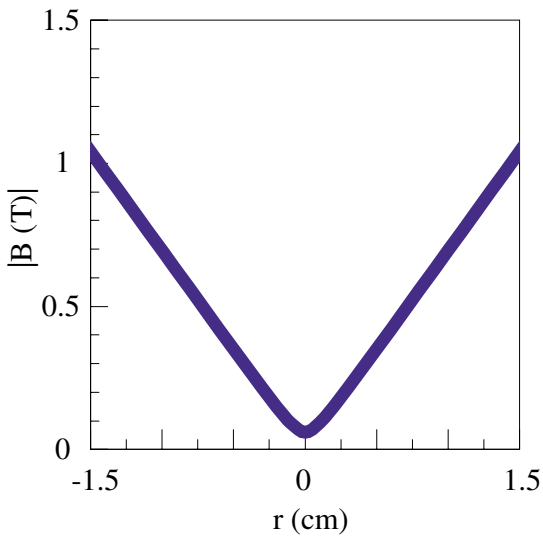

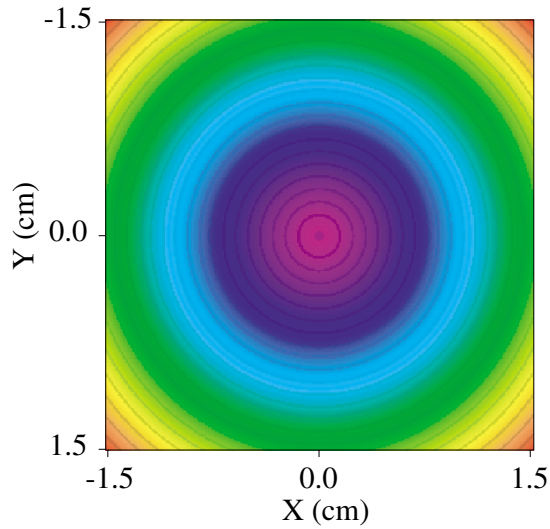

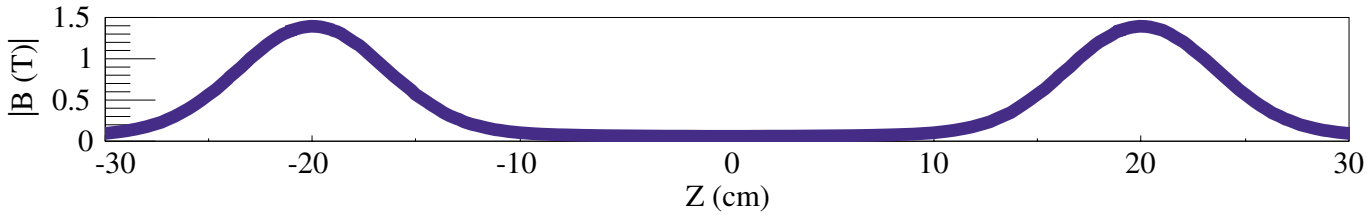

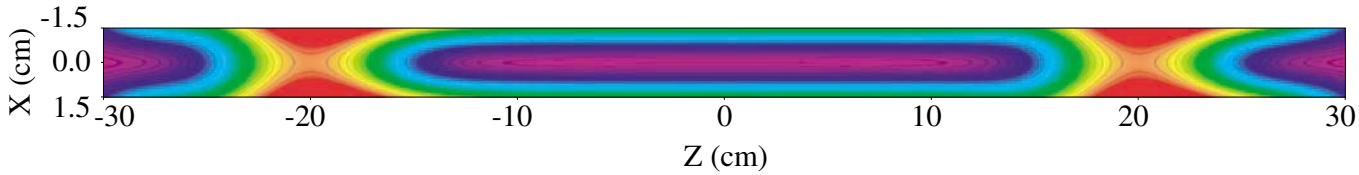

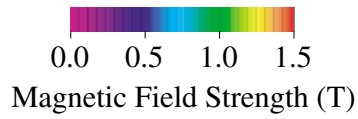

P. R. Huffman

Loading the Trap

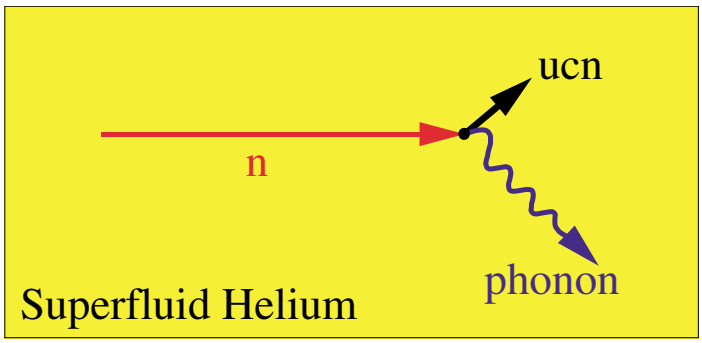

$$\vec{p}_{ucn} = \vec{p}_n - \vec{q}_{phonon}$$

$$E_{ucn} = E_n - E_{phonon}$$

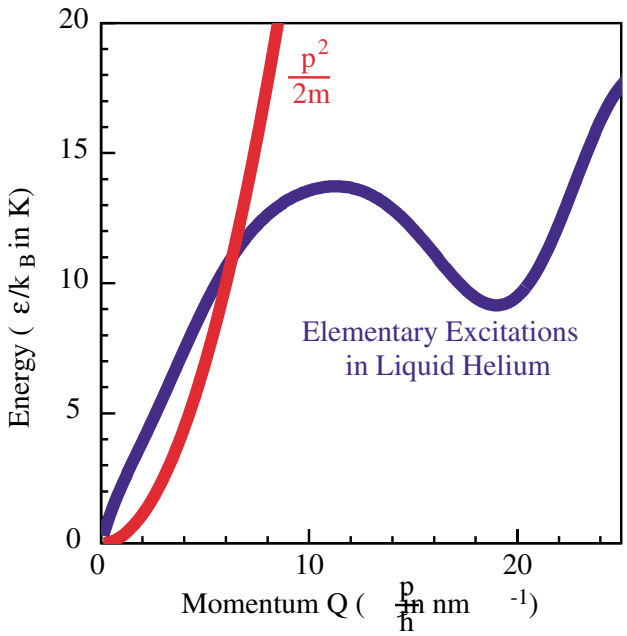

- Neutrons of energy E ≈ 0.95 meV (11 K or 0.89 nm) can scatter in liquid helium to near rest by emission of a single phonon.

- Upscattering (by absorption of an 11 K phonon) ∝ Population of 11 K phonons ~ $e^{-11K/T_{bath}}$

Detection of Trapped Neutrons

$$n \rightarrow p^{+} + e^{-} + \overline{\nu}_{e}$$

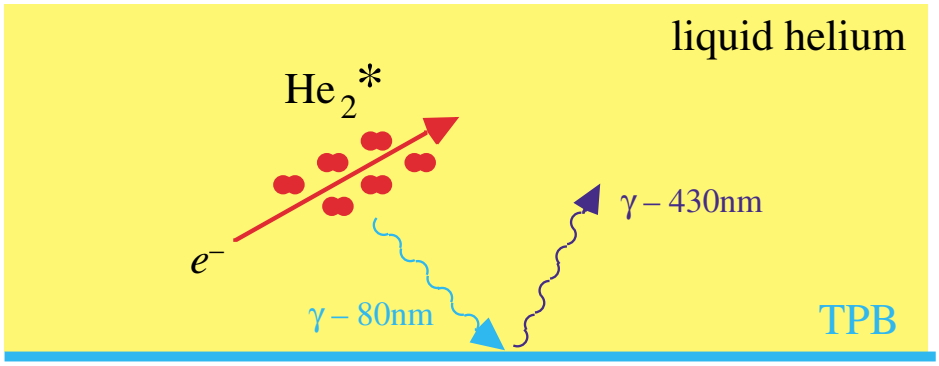

- Recoil electron creates an ionization track in the helium.
- Helium ions form excited He_2* molecules (ns time scale) in both singlet and triplet states.
- He_2* singlet molecules decay, producing a large prompt (<20 ns) emission of extreme ultraviolet (EUV) light.
- EUV light (80 nm) converted to blue using the organic fluor TPB (tetraphenyl butadiene).

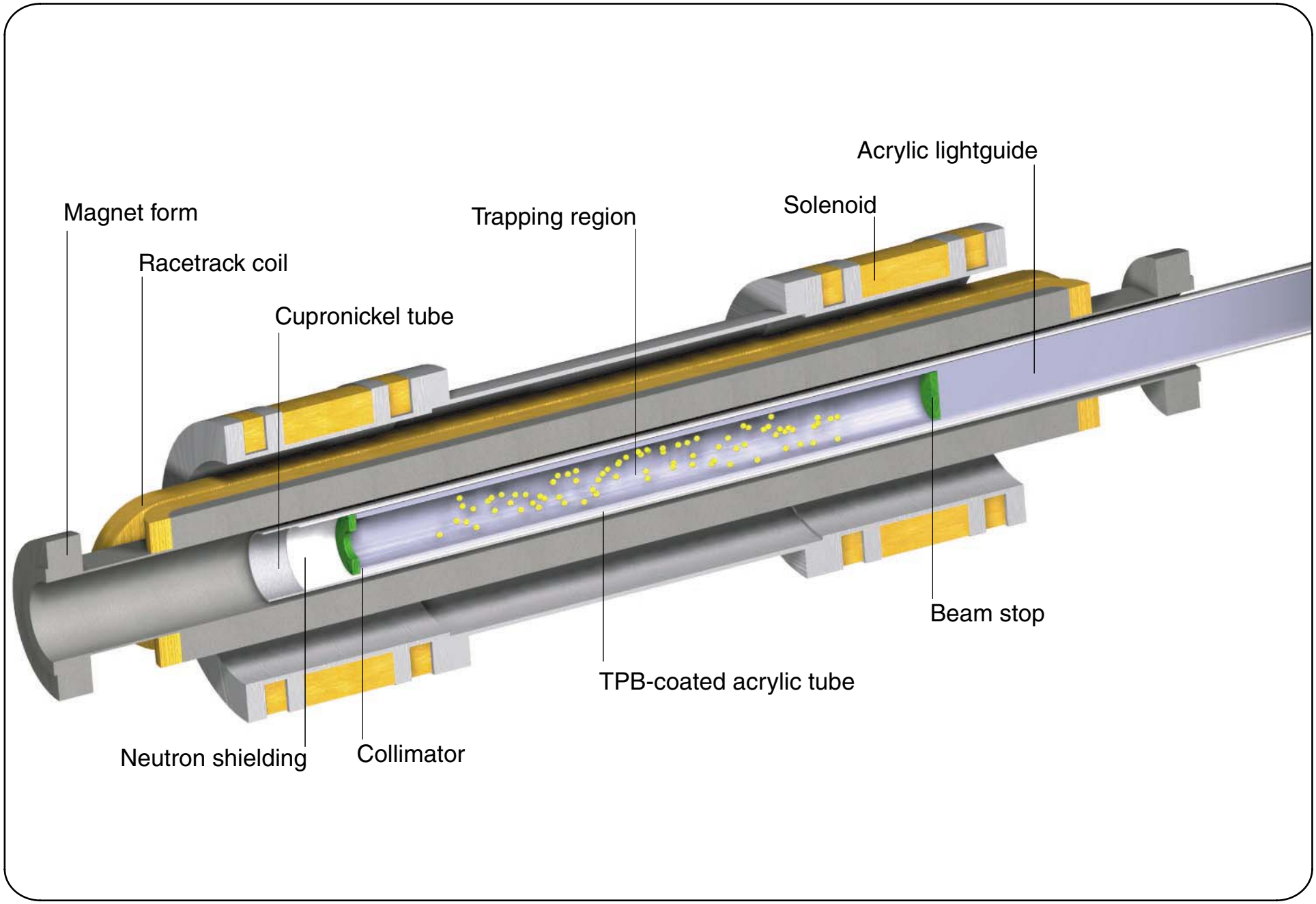
Acrylic lightguide
Solenoid
Trapping region
Magnet form
Racetrack coil
Cupronickel tube
Beam stop
TPB-coated acrylic tube
Neutron shielding
Collimator

P. R. Huffman

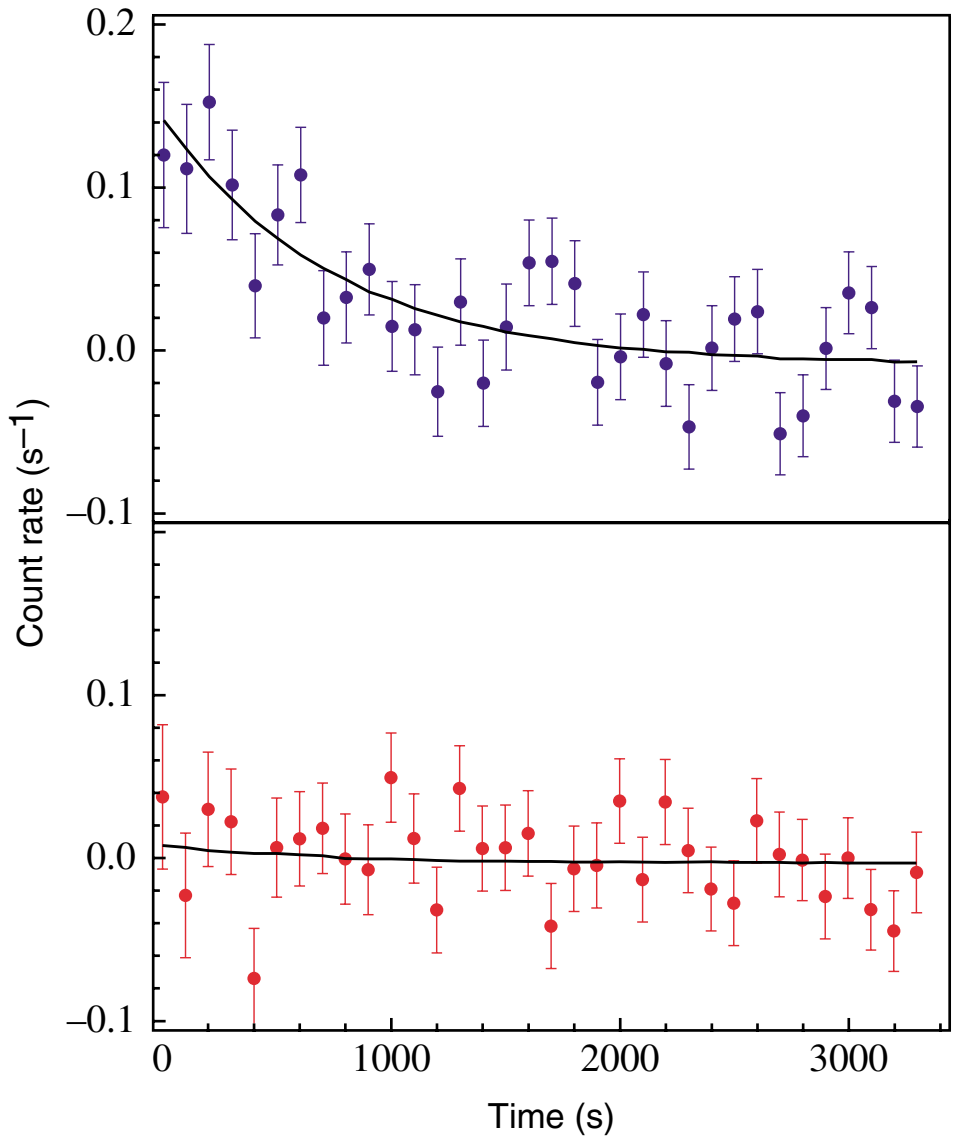

$W_1 = a_1\, e^{-t/\tau} + C_1$ $\qquad$ $W_2 = a_2\, e^{-t/\tau} + C_2$

Trapping data (blue):

a $= 0.16\ s^{-1} \pm 0.03\ s^{-1}$

C $= 0.003 \pm 0.007$

τ $= 660$ s $+290$ s/-170 s

^{3}He data (red):

a $= -0.040\ s^{-1} \pm 0.045\ s^{-1}$

C $= -0.011 \pm 0.011$

τ = fixed at 750 s

Total number trapped:

N $= 453 \pm 100$

Theory Predicts:

N $= 500 \pm 170$

How Do We Increase the Statistics?

- Increase the number of trapped neutrons by building a larger, deeper magnetic trap. Number trapped:
  - Scales with magnetic field as $B^{3/2}$
  - Scales with the trap radius faster than r^2
  - Scales with length

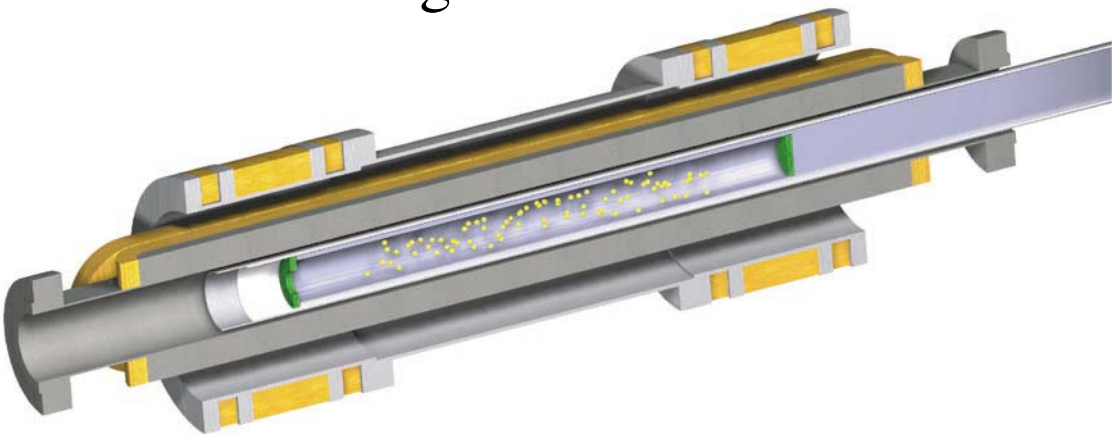

- Increase the detection efficiency (30 % → > 90 %)
  - Clear beam stop, Larger diameter cell

- Reduce backgrounds
  - 0.9 nm neutron monochromator
  - Additional external shielding

Larger, Deeper Magnet

- Original Magnet (demonstration of trapping):
  - $Ø_{Magnet}$ = 5.1 cm
  - $Ø_{Trap}$ = 3.2 cm, L = 30 cm
  - B_{Trap} = 1.0 T, I_{Trap} = 180 A

- New Magnet
  - $Ø_{Magnet}$ = 10.5 cm
  - $Ø_{Trap}$ = 8.6 cm, L = 27 cm
  - B_{Trap} = 1.6 T, I_{Trap} = 225 A

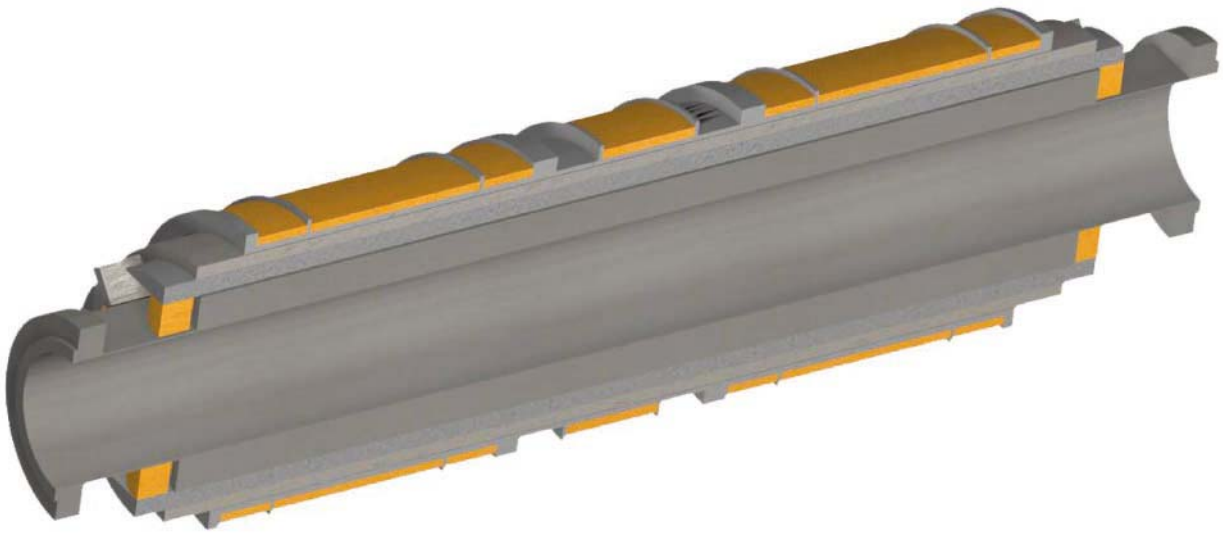

NIST

P. R. Huffman

Original Apparatus

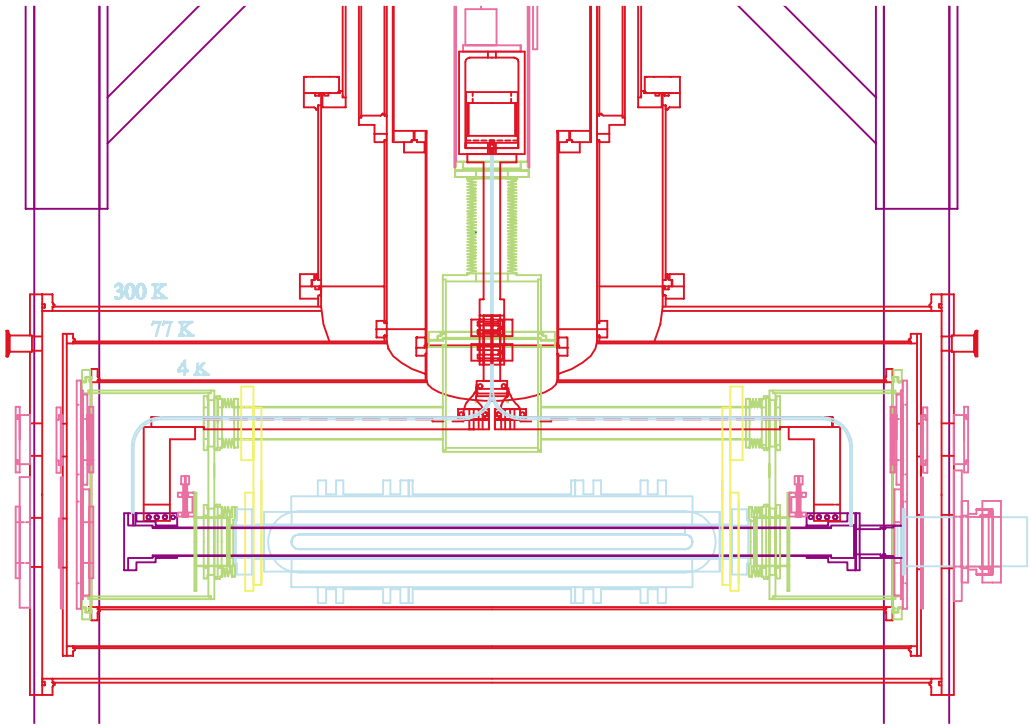

Current Apparatus

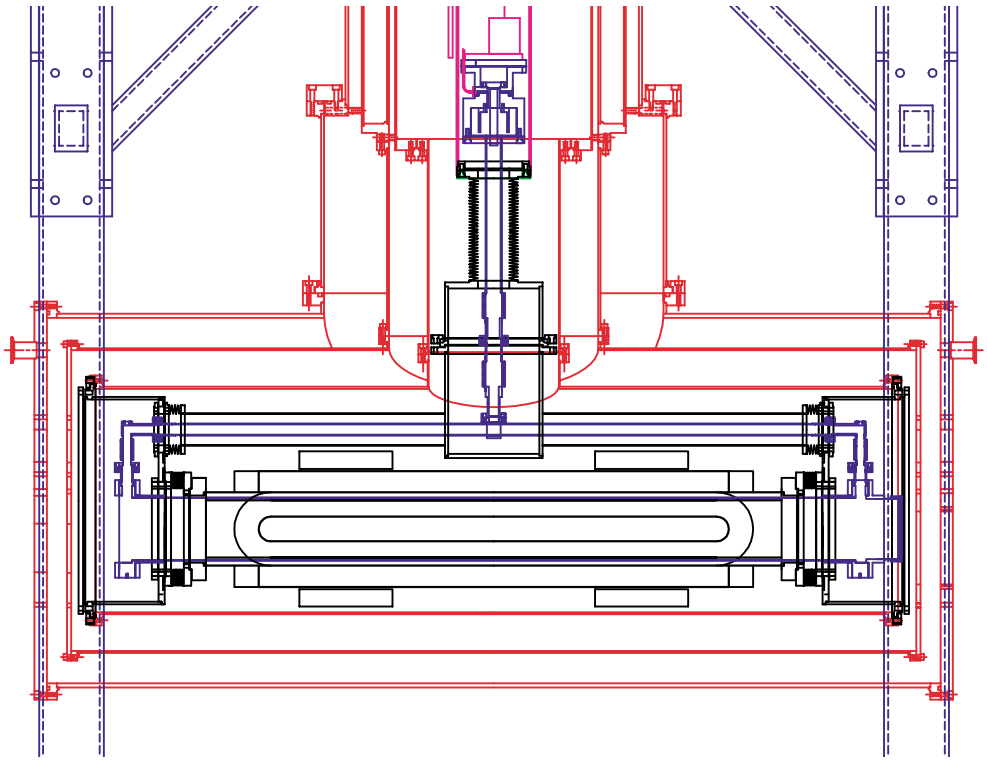

P. R. Huffman

Increased Detection Efficiency

- Original design:
  - TPB in polystyrene
  - Light transport via total internal reflection
  - 5 p.e. signal for 360 keV beta
  - 30 % efficiency

- New design:
  - TPB evaporated onto Gore-tex
  - Clear B_2O_3 beam stop
  - 30 p.e. signal for 360 keV beta
  - > 90 % efficiency

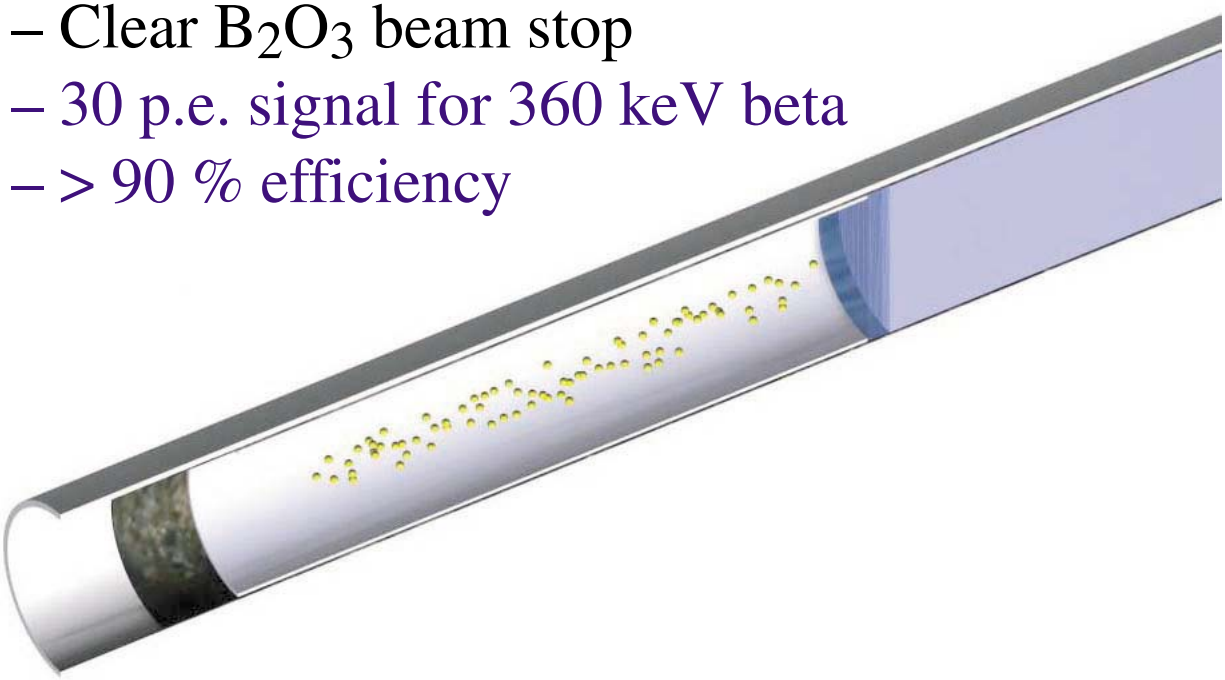

Detector calibration

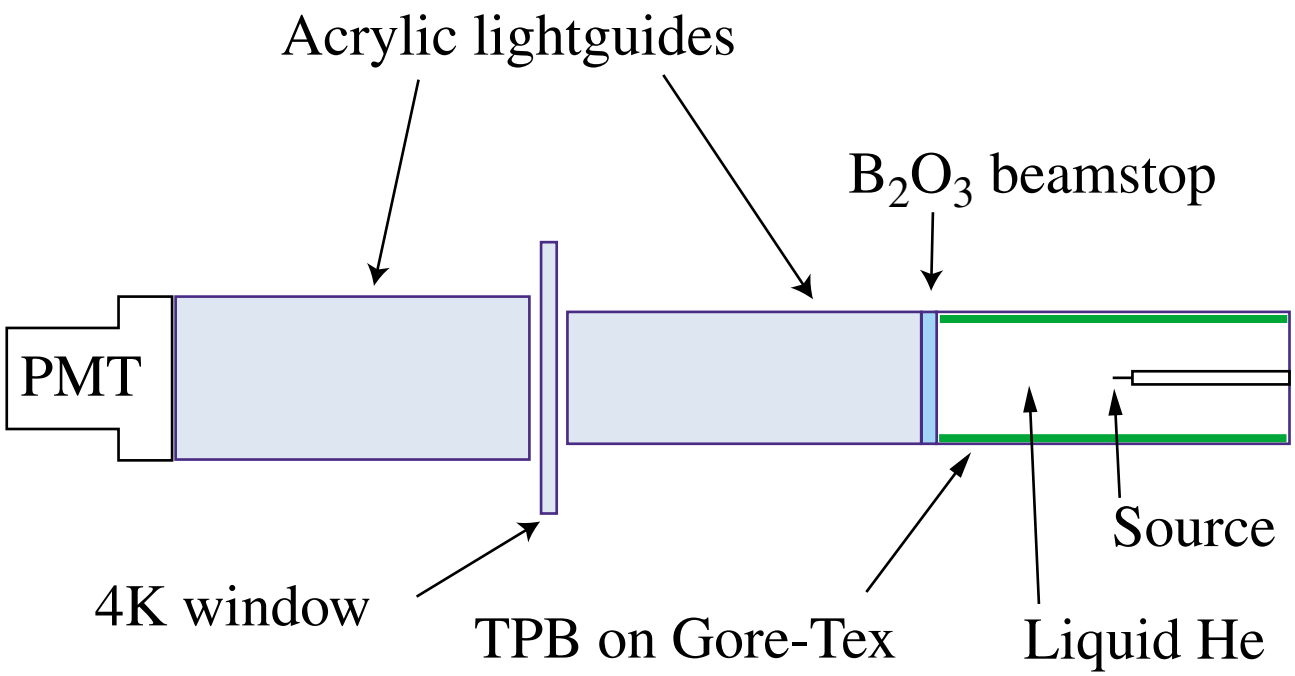

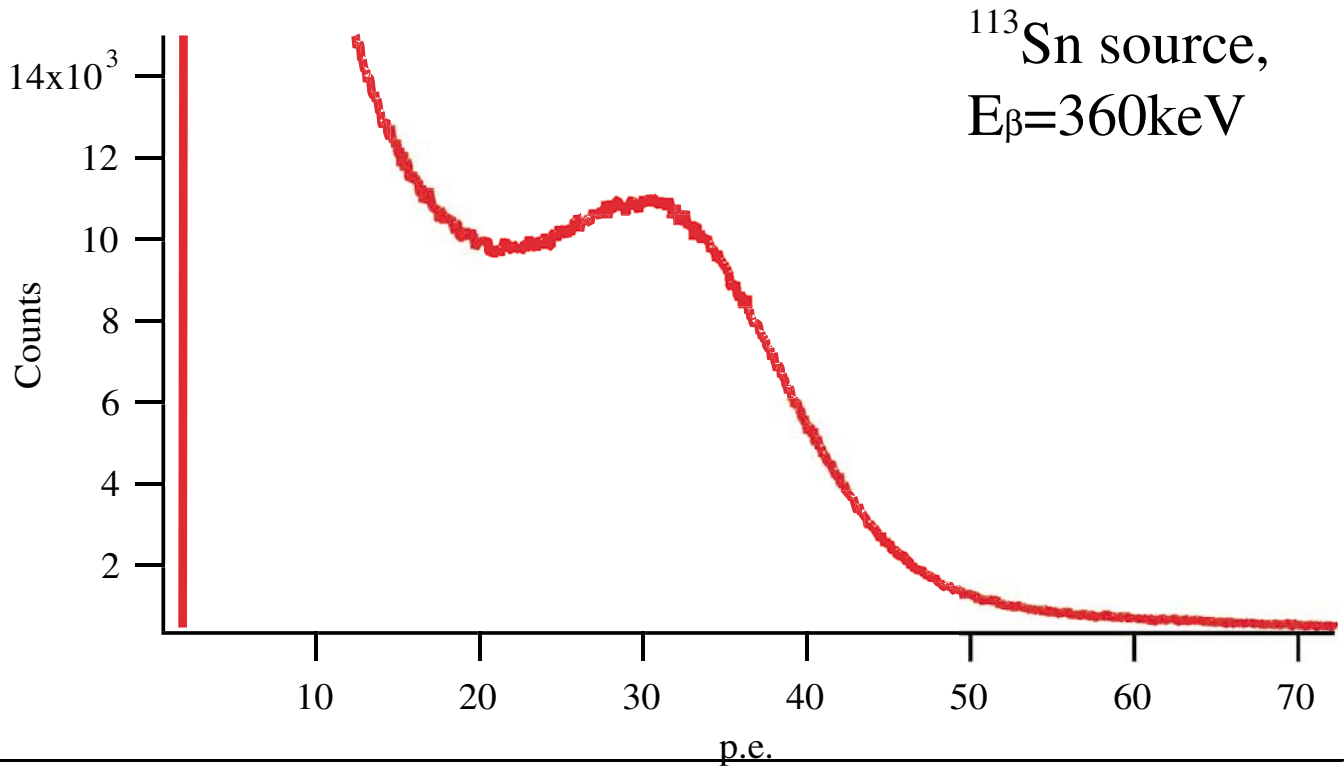

0.89 nm Monochromator

Material	KC_8	KC_{24}	Fluorophlogopite
d (Å)	5.35	8.74	9.963
θ_{Bragg} (°)	56.3	30.6	26.5
Measured samples:			
β (°)	3.9	2.2	0.05-0.35
8.9 Å peak reflectivity (%)	70	51	30

2 Zone Oven

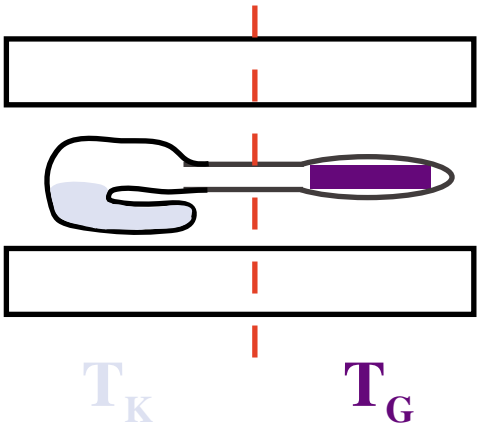

T_K = 208°C T_G = 320 °C

Intercalation to Stage 2 takes 4-5 Days

0.89 nm Monochromator

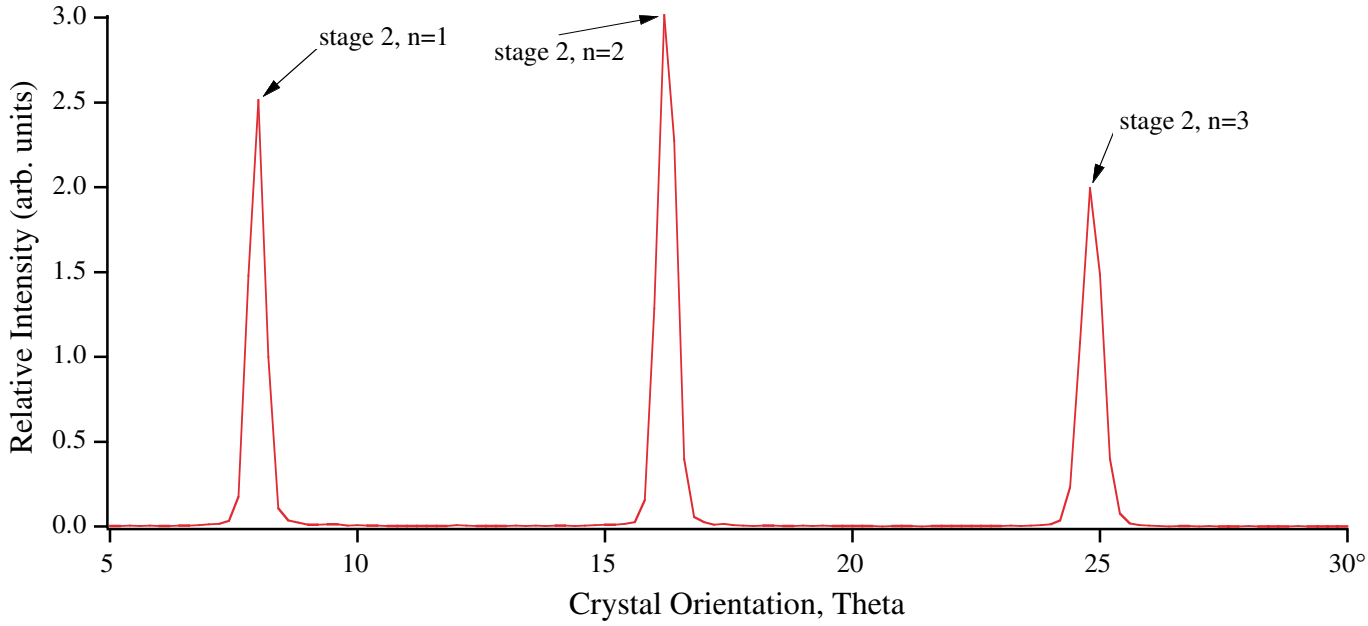

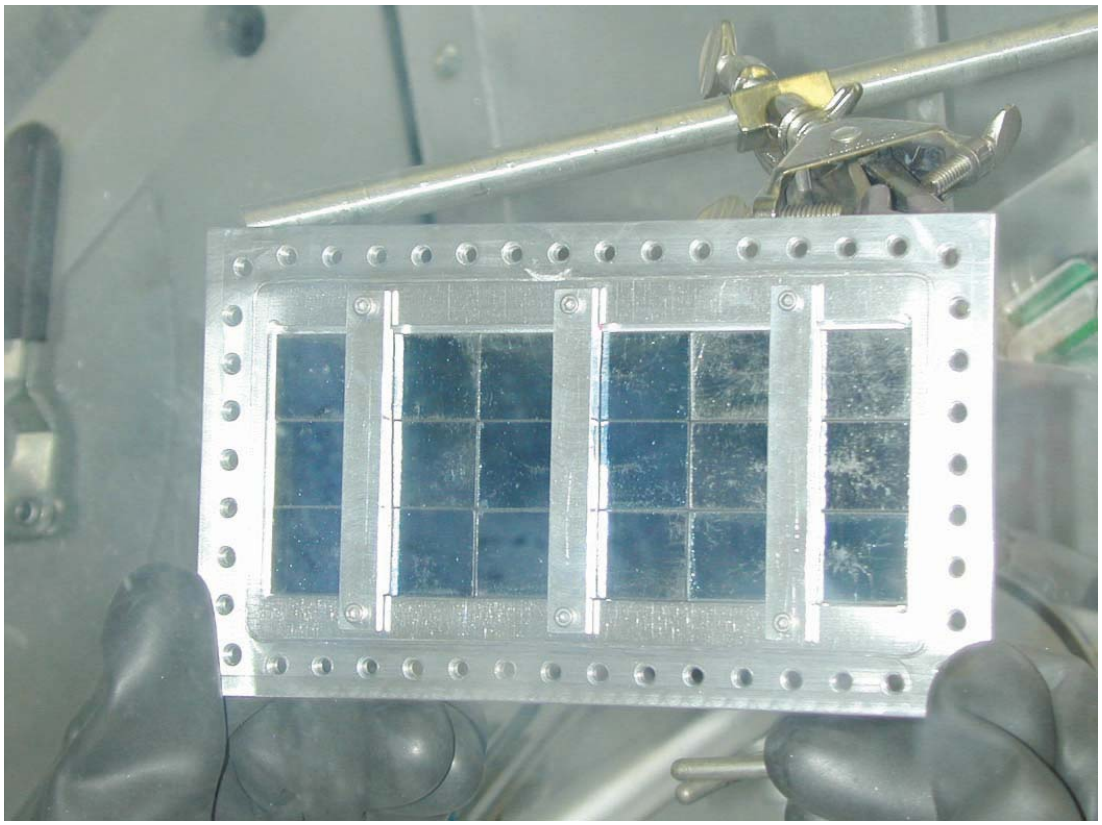

P. R. Huffman

Installed Monochromator TOF

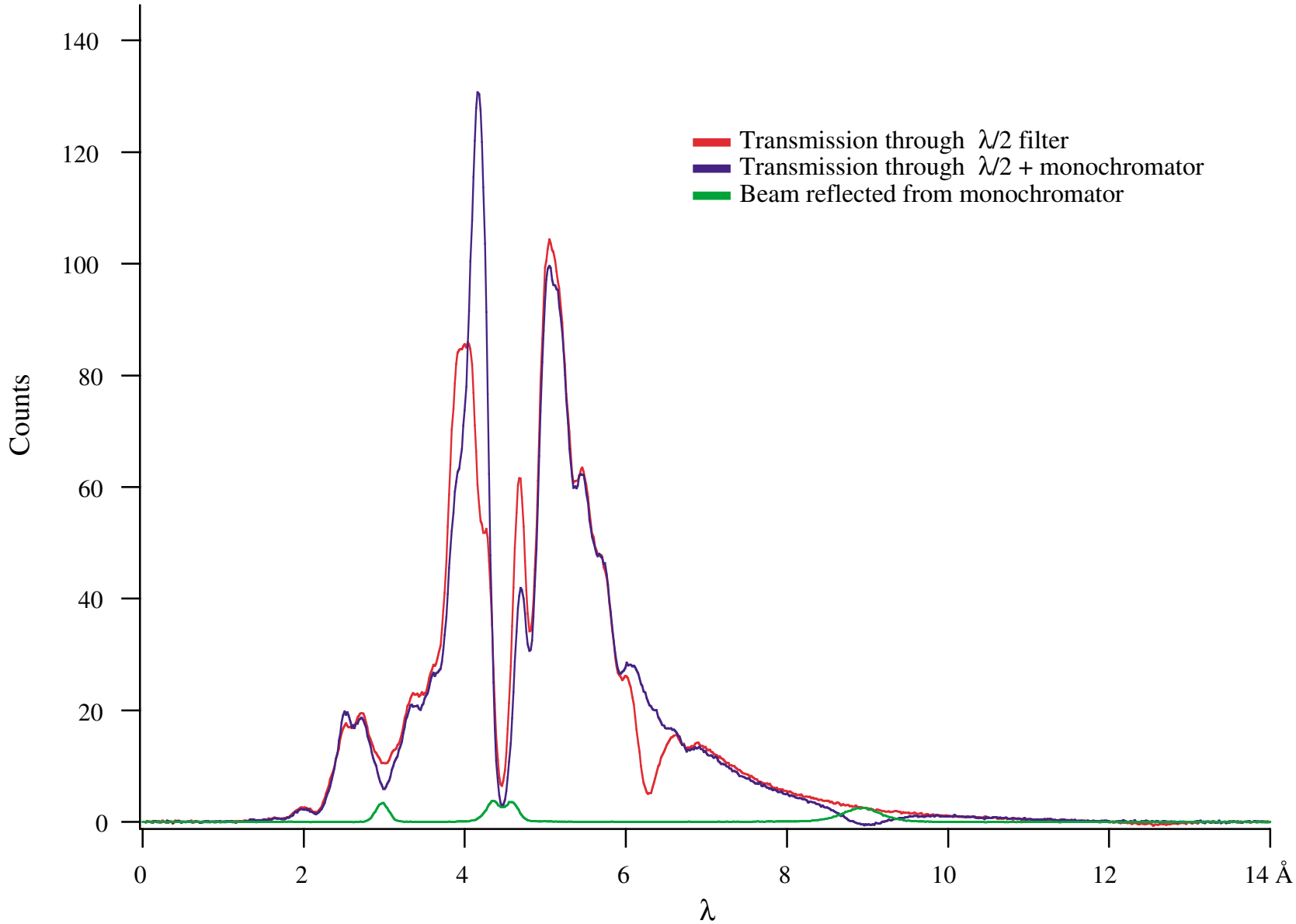

NIST

P. R. Huffman

Upgrade Estimates

- Original Magnet (B_{Trap} = 1.0 T)

Trapped per load
450

- New Magnet (B_{Trap} = 1.6 T) with monochromator

# Trapped per load	σ_{τ_n} (2 cycles)
7,500	1.8 s

Conclusions

- Magnetic trapping previously demonstrated:
  - 500 UCN trapped per load;
  - Polarized UCN density of 1.8 cm^{-3}.

  (Huffman *et. al.*, Nature **403**, 2000, p. 62)

- Improvements made to allow a measurement of τ_n:
  - Larger, deeper magnetic trap;
  - Monochromatic 0.9 nm beam;
  - New detection system.

- With current apparatus:
  - ~50 x detected trapped UCN (~3 x density);
  - τ_n measurement of $\pm$ 1 – 2 s (statistics).

- Present status:
  - Monochromator characterized;
  - Dewar assembled, leak-tight, and cold;
  - Detector characterized;
  - Performing initial diagnostic runs with entire apparatus.

τ_n in Superfluid Helium

Idea: τ_n different in ^{4}He than in vacuum

- Changes in the phase space
  - interaction of the neutron with an average potential from the helium nuclei

    $V \sim 2 \times 10^{-8}$ eV

    relative decrease in τ_n of ~ 10^{-13}

  - energy of the electron is slightly higher in ^{4}He

    $E_{min} \sim 1.3$ eV

    Increases τ_n by ~ 6×10^{-6} by reducing the maximum kinetic energy available to the electron.

  - energy of the proton is slightly lower in ^{4}He

    $\Delta E \sim 2$ eV

    At most a 10^{-5} effect, but probably will occur subsequent to the decay and have no effect.

- Matrix element for the decay can be influenced

  ie. g_a is 26 % greater in neutron decay than in muon decay.

  $\therefore$ A 20 % shift in the matrix element for a neutron bound in a nucleus gives a 10^{-16} effect.