NPDgamma Liquid Hydrogen Target Safety Review

At LANL

November 29-30, 2005

NPDgamma *Experiment*

Precision Measurement of Parity Violating Directional Gamma-Ray Asymmetry in

Polarized Cold Neutron Capture on Proton

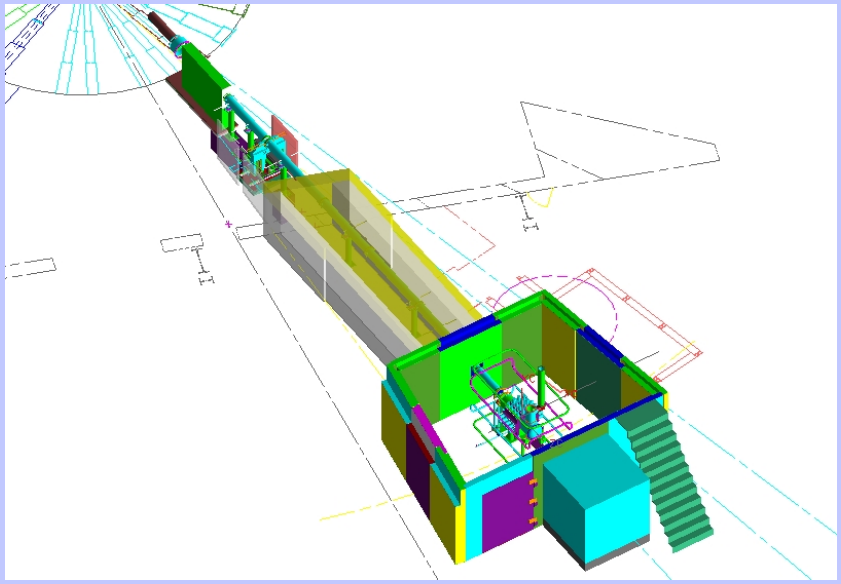

NPDGamma Experiment Setup in FP12

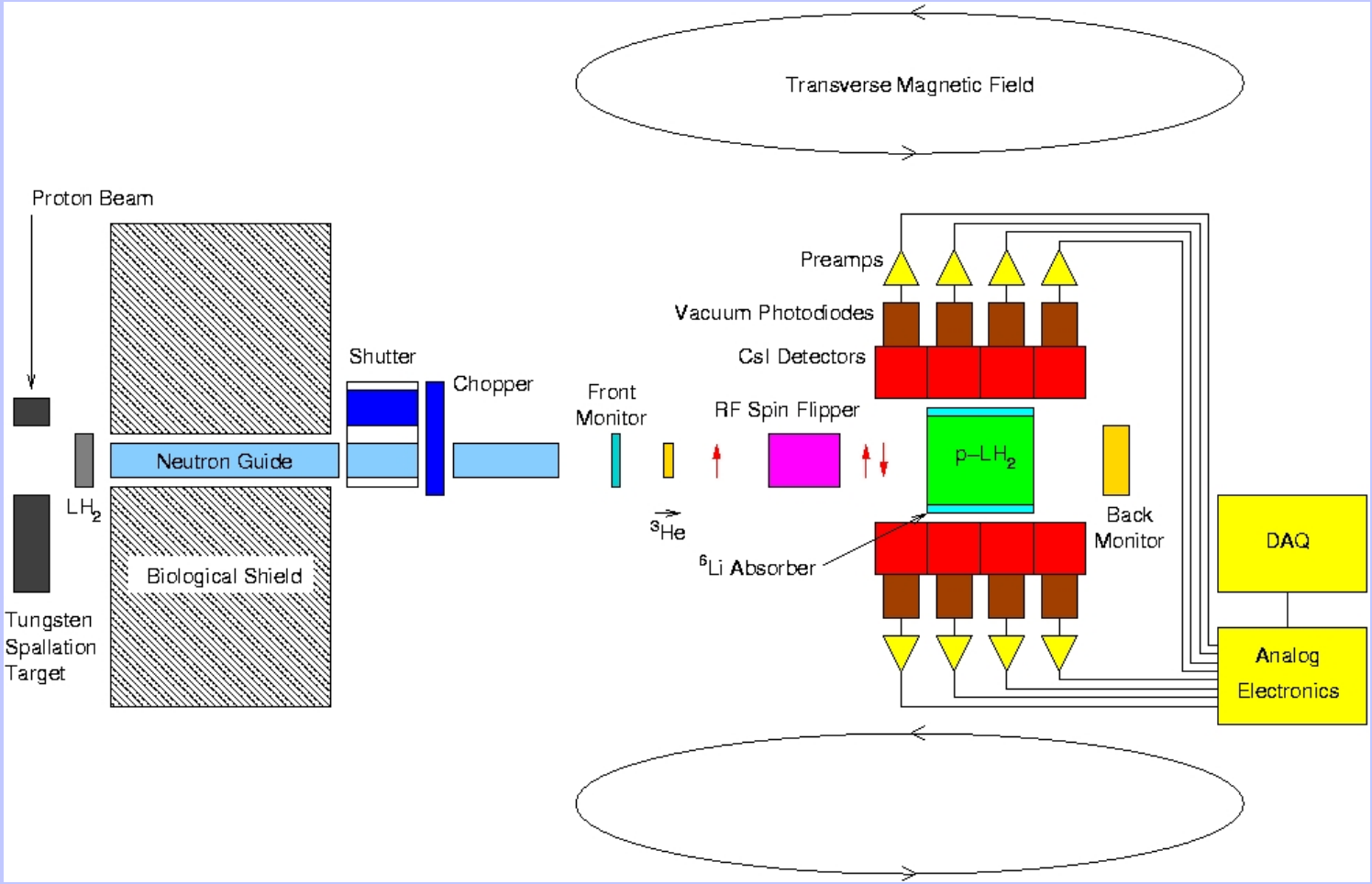

Scientific goal of the $\vec{n} + p \rightarrow d + \gamma$ *experiment*

Scientific goal is to make the most sensitive measurement of A_γ*, the* $\sigma_n \cdot k_\gamma$ *asymmetry in the* $n+p \rightarrow d+\gamma$ *reaction with cold polarized neutrons to determine unambiguously the weak* πNN *coupling constant*

The NPDγ Collaboration

J. David Bowman,[1] Roger D. Carlini,[2] Timothy E. Chupp,[3] Wangchun Chen,[4,5] Mikayel Dabaghyan,[6] Dharmin Desai,[7] Stuart J. Freedman,[8] Thomas R. Gentile,[5] Michael T. Gericke,[9] R. Chad Gillis,[9] Geoffrey L. Greene,[7,10] F. William Hersman,[6] Takashi Ino,[11] Takeyasu Ito,[7] Gordon L. Jones,[12] Martin Kandes,[3] Bernhard Lauss,[8] Mark Leuschner,[4] Bill Losowki,[13] Rob Mahurin,[7] Yasuhiro Masuda,[11] Jiawei Mei,[4] Gregory S. Mitchell,[1] Suguro Muto,[11] Hermann Nann,[4] Shelley Page,9 Seppo Pentilla,[1] Des Ramsay,[9,14] Satyaranjan Santra,[15] Pil-Neyo Seo,[16] Eduard Sharapov,[17] Todd Smith,[18] W.M. Snow,[4] W.S. Wilburn,[1] Vincent Yuan,[1] Hongguo Zhu[6]

[1]Los Alamos National Laboratory
[2]Thomas Jefferson National Accelerator Facility
[3]Dept. of Physics, Univ. of Michigan, Ann Arbor
[4]Dept. of Physics, Indiana University, Bloomington
[5]National Institute of Standards and Technology
[6]Dept. of Physics, Univ. of New Hampshire, Durham
[7]Dept. of Physics, Univ. of Tennessee, Knoxville
[8]Univ. of California at Berkeley
[9]Dept. of Physics, Univ. of Manitoba, Winnipeg
[10]Oak Ridge National Laboratory
[11] High Energy Accelerator Research Organization (KEK), Tsukuba, Ibaraki, Japan
[12]Dept. of Physics, Hamilton College, Clinton, NY
[13]Indiana University Cyclotron Facility, Bloomington
[14]TRIUMF, Vancouver, British Columbia
[15]Bhabha Atmoic Research Center, Mumbai, India
[16]Dept. of Physics, North Carolina State University, Raleigh
[17]Joint Institute of Nuclear Research, Dubna, Russia
[18]Dept. of Physics, Univ. of Dayton, Dayton

NPDgamma *Project*

- Scientific proposal was written in 1997
- *Management Plan* *"The $n+p \rightarrow D+\gamma$ Project Management Plan for Experiment and Beam Line Construction"* *was signed in 2001.*
- *Sponsors: DoE Nuclear Physics, NSF, NSERC, LANL, collaborating institutes*
- *Capital cost of the project is roughly $2.5mil + $2.5 mil*
- *Beamline construction project completed 02/04*
- *Experiment construction project has:*
  - ✓ *11 work packages*
  - ✓ *responsibilities by collaborators and LANL*
  - ✓ *completed except of the LH_2 target work package*
  - ✓ *project completion forecast/actual 6/03*

Status and plans

- *Status*
  - *Beamline completed in 2004*
  - *Experiment completed except of the target in 2004*

- *The plan*
  - *is to have LH_2 target ready for beam and the* $\vec{n} + p \rightarrow d + \gamma$ *production in at the end of March when beam is assumed to be available at the Lujan Center*

Project's review history

- *Scientific proposal was written in 1997*
- *Pendlebury Committee's physics review in 1997*
- *Spinka I Committee' technical review in 1998*
- *1999 the 1st Target Review "Preliminary Conceptual Design Review of the NPDGamma Experiment Hydrogen Target"*
- *Spinka II Committee's technical review in 2000*
- *2001 the 2nd Target Review "10% design review" set " a baseline" for further design.*
- *Spinka III technical review in November 2002*
- *DOE technical progress review on October 2004*
- *2005 the 3rd Target Review*
- *Preliminary plan for the closeout review agreed to be on August 2006*

Organizational Chart in Nuclear Physics Program

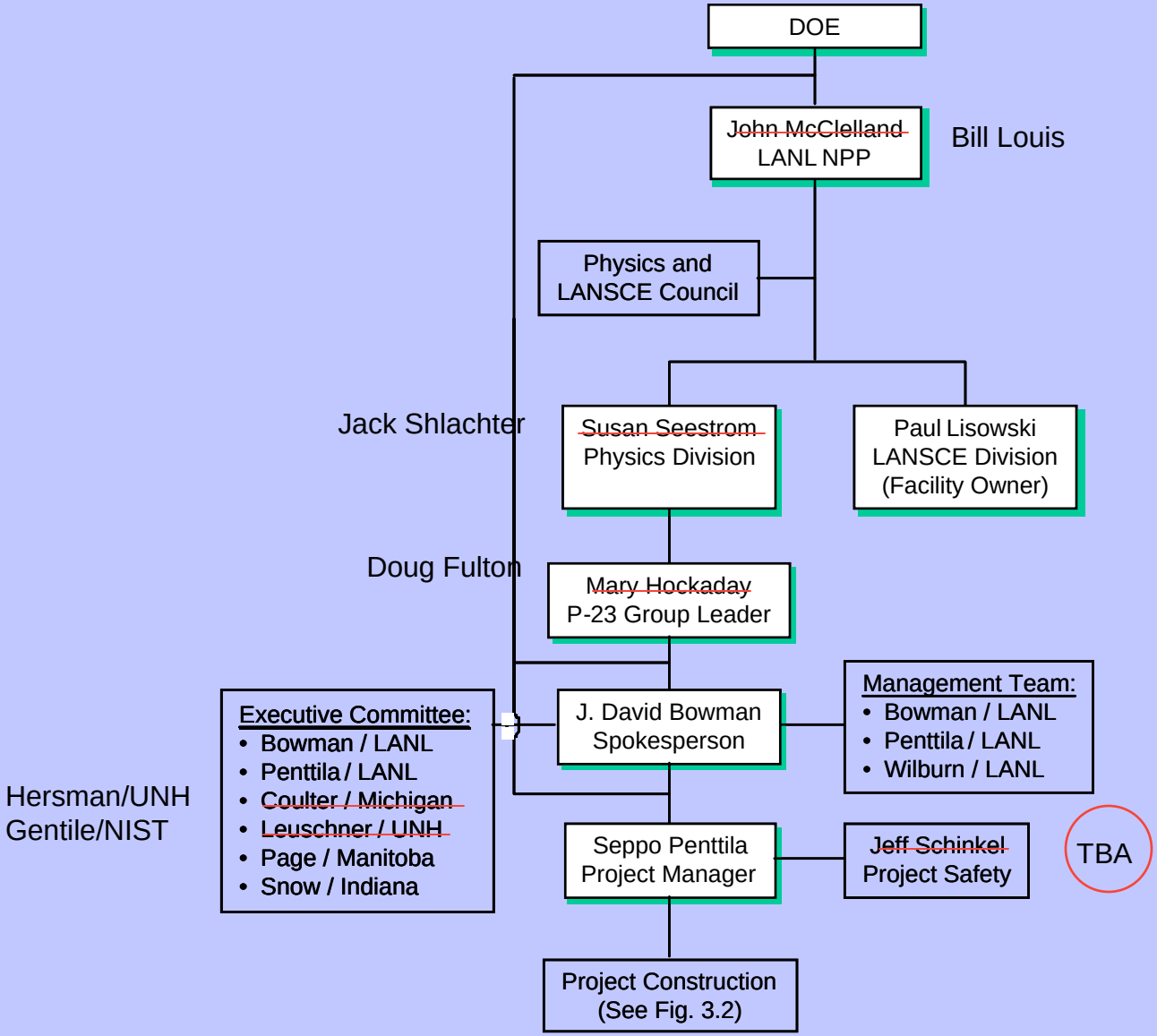

Safety Hierarchy in the LH_2 Target Project

- *DOE is involved through the Facility Authorization Basis.*
  - *USI needs to be performed against the ISAD in addition to the USQs (=unresolved/unreviewed safety questions) that have already been done.*
- *At Lab the highest level signature is coming from LANSCE Division leader; Paul Lisowski. He signs the Authorization Basis, and he is the RDL=responsible Division Leader who signs IWD=Integrated Work Document.*
- *Next level of signature is coming from RGL=responsible Group Leader D. Fulton, P-23) who signs IWD to authorize the work and personnel.*
- *Readiness Review by facility - signature by Alan Hurd, Director of Lujan Center.*

Safety Hierarchy in the LH_2 Target Project

- *DOE is involved through the Facility Authorization Basis.*
  - *USI needs to be performed against the ISAD in addition to the USQs (=unresolved/unreviewed safety questions) that have already been done.*
- *At Lab the highest level signature is coming from LANSCE Division leader; Paul Lisowski. He signs the Authorization Basis, and he is the RDL=responsible Division Leader who signs IWD=Integrated Work Document.*
- *Next level of signature is coming from RGL=responsible Group Leader D. Fulton, P-23) who signs IWD to authorize the work and personnel.*
- *Readiness Review by facility - signature by Alan Hurd, Director of Lujan Center.*

Experiment Setup

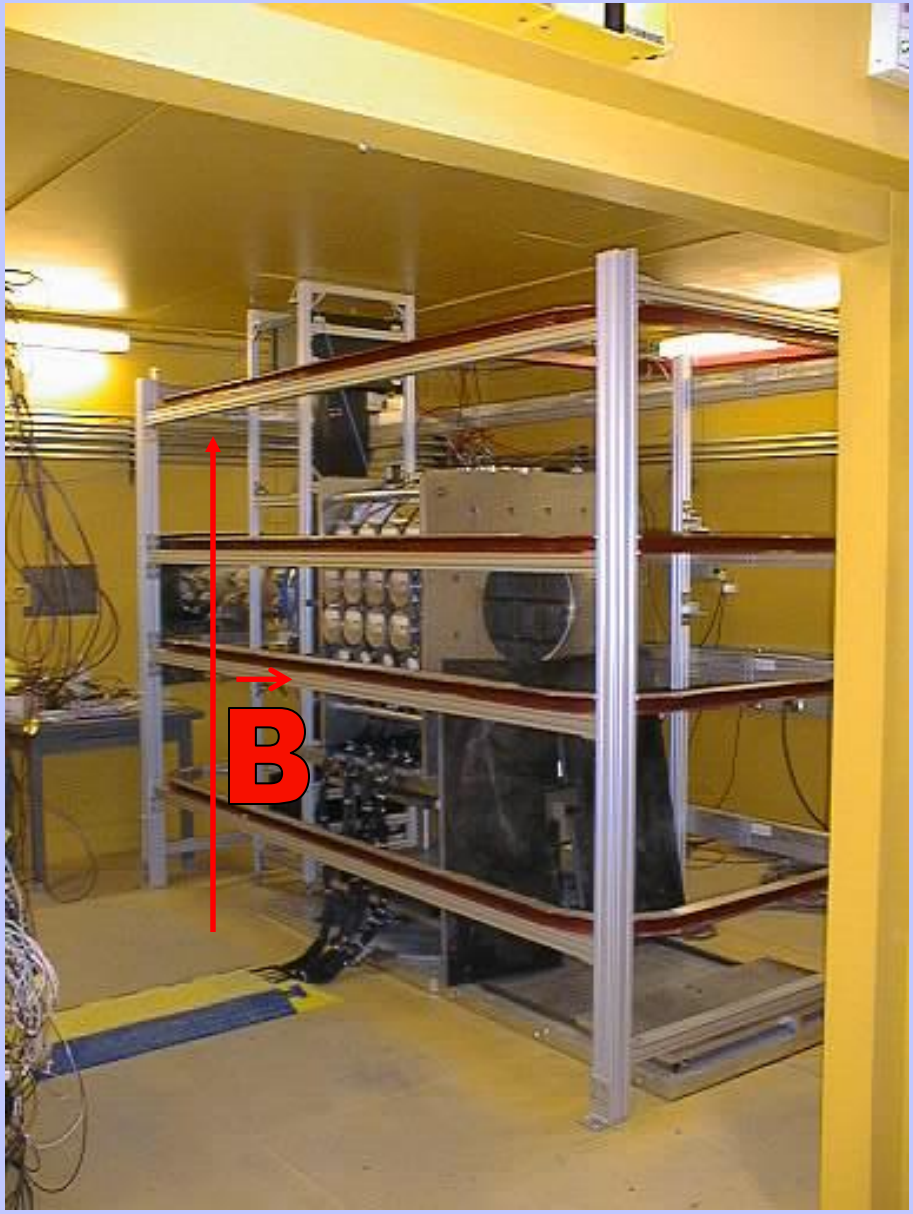

Highlights of the 4th quarter of 2005

- *The LH_2 target vent stack installed - effort and $$s burned in wrong place*
- *Main focus of the collaboration has been the testing of the LH_2 target in MPF35 (shed) - steady but slow progress*
- *With beam in FP12:*
  - ✓ *detector table motion fixed and effect measured - important for making the detector symmetric*
  - ✓ *measured ^{3}He polarization up to 55% but we have also observed long-term decay of ^{3}He polarization when beam is on - we try to understand this loss mechnasim*
  - ✓ *we have continued engineering runs*
  - ✓ *we have measured A_γ on several nuclear targets around $A \approx 50$*

LH_2 Target Vent Stack and Gas Panel Ventilation Pipe

Highlights of the 4th quarter of 2005

- *The LH_2 target vent stack installed - effort and $$s burned in wrong place*
- *Main focus of the collaboration has been the testing of the LH_2 target in MPF35 (shed) - steady but slow progress*
- *With beam in FP12:*
  - ✓ *detector table motion fixed and effect measured - important for making the detector symmetric*
  - ✓ *measured ^{3}He polarization up to 55% but we have also observed long-term decay of ^{3}He polarization when beam is on - we try to understand this loss mechnasim*
  - ✓ *we have continued engineering runs*
  - ✓ *we have measured A_γ on several nuclear targets around $A \approx 50$*

Hydrogen Target at Shed

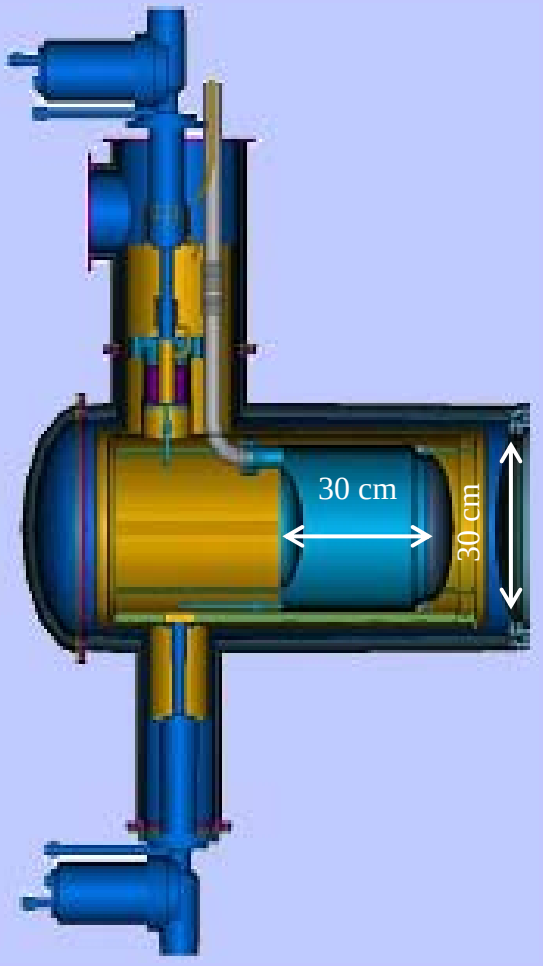

LH2 Target Vessel and Isolation Vacuum

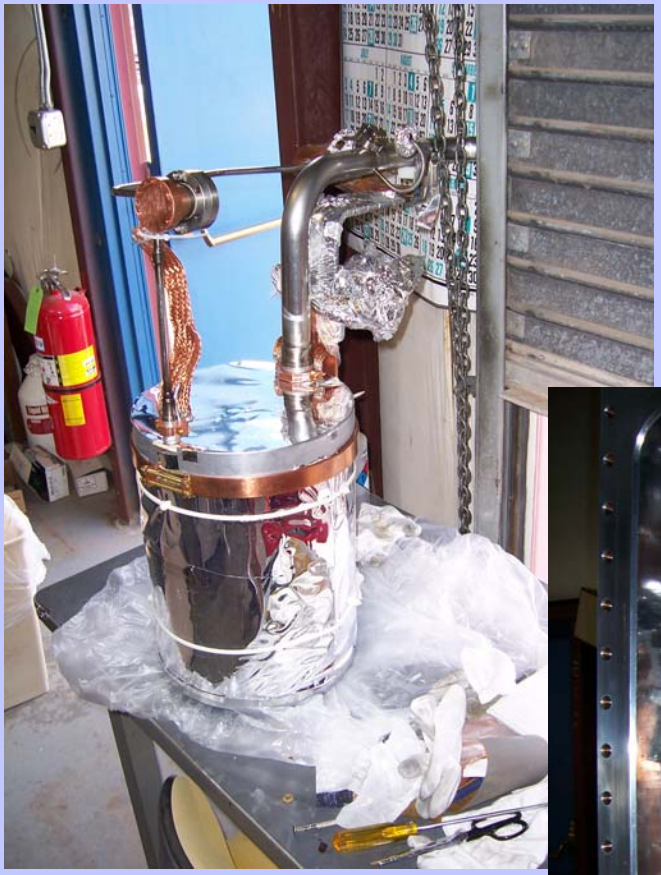

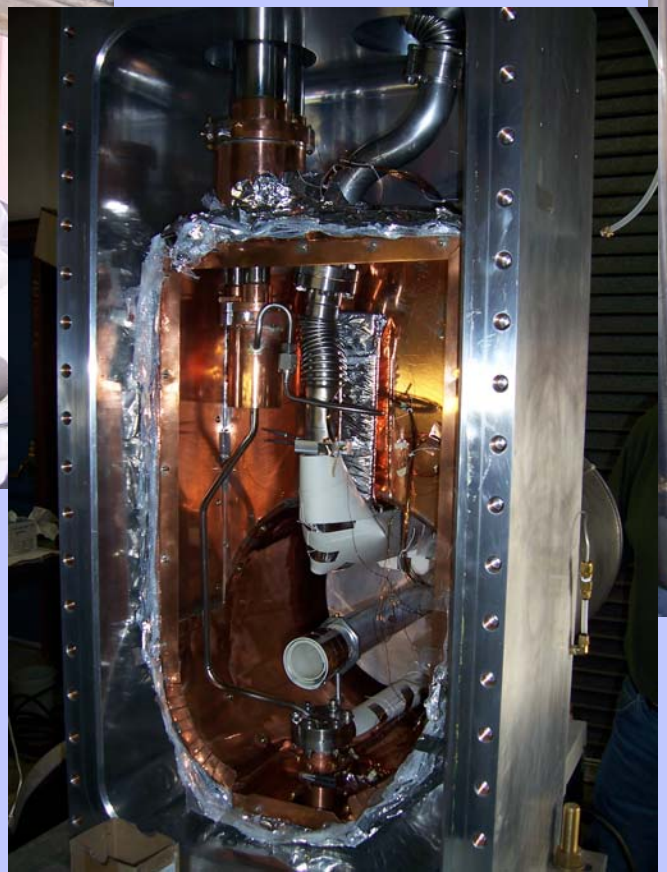

WARNING
OXYGEN GASES
IN USE

Gas Panel

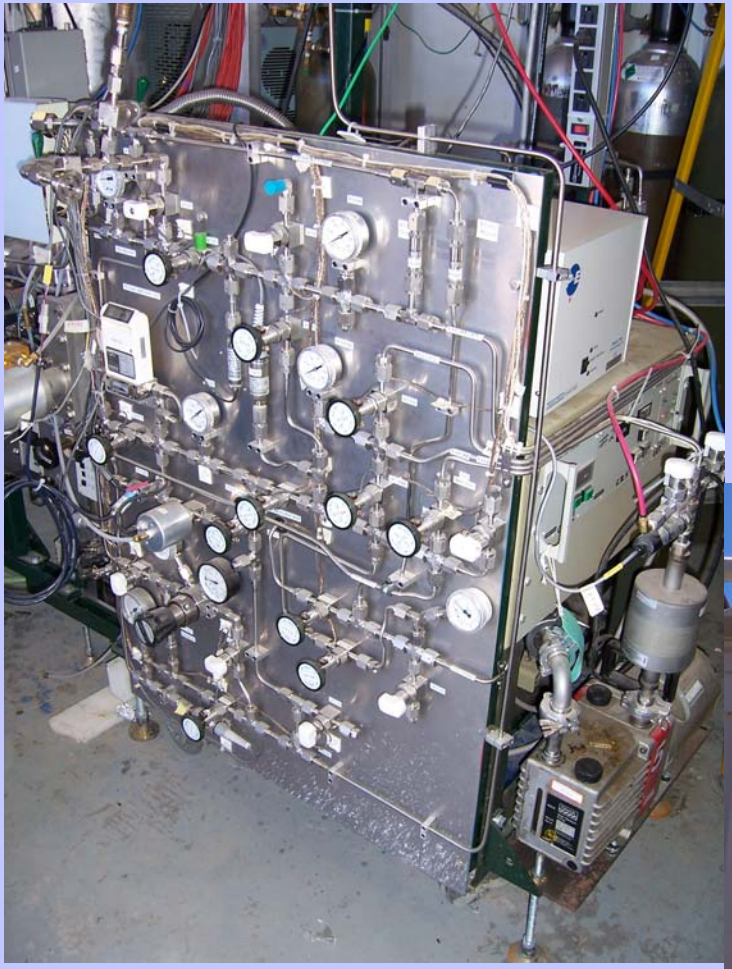

Highlights of the 4th quarter of 2005

- *The LH_2 target vent stack installed - effort and $$s burned in wrong place*
- *Main focus of the collaboration has been the testing of the LH_2 target in MPF35 (shed) - steady but slow progress*
- *With beam in FP12:*
  - ✓ *detector table motion fixed and effect measured - important for making the detector symmetric*
  - ✓ *measured ^{3}He polarization up to 55% but we have also observed long-term decay of ^{3}He polarization when beam is on - we try to understand this loss mechnasim*
  - ✓ *we have continued engineering runs*
  - ✓ *we have measured A_γ on several nuclear targets around $A \approx 50$*

Results of engineering runs and runs with nuclear targets

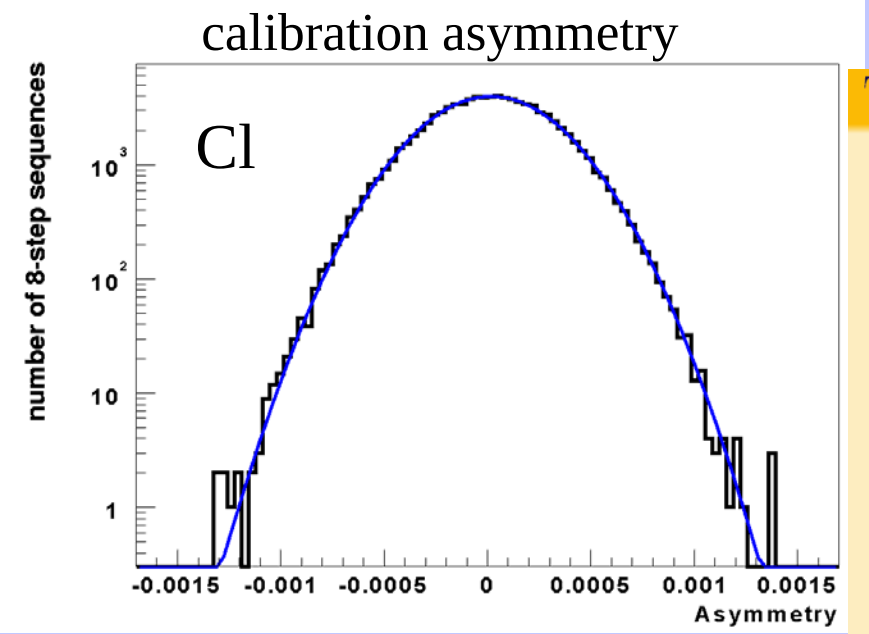

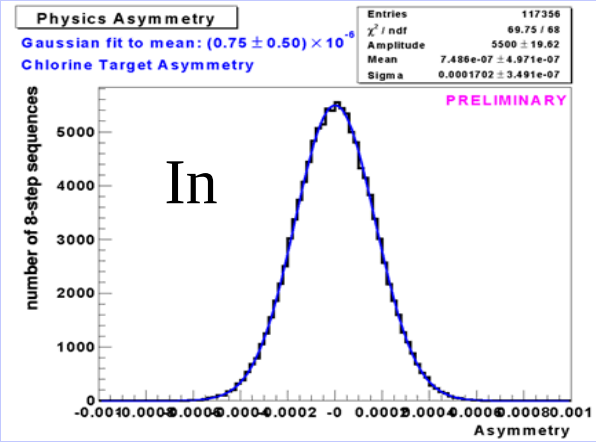

Targets and Asymmetries

- In: $A_\gamma = (-6.8 \pm 3.0) \times 10{-}7$:Estimated - A_γ RMS - 1.0×10^{-6}
- Mn: $A_\gamma = (5.3 \pm 7.8) \times 10{-}7$:Estimated - A_γ RMS - 1.3×10^{-7}
- Sc: $A_\gamma = (-7.0 \pm 2.8) \times 10{-}7$
- Co: $A_\gamma = (6.1 \pm 3.1) \times 10{-}7$
- Ti: $A_\gamma = (7.1 \pm 4.0) \times 10{-}7$
- Al: $A_\gamma = (-0.02 \pm 3) \times 10{-}7$:Estimated - A_γ RMS - 4×10^{-8}
- Cl: $A_\gamma = (-21 \pm 1.6) \times 10{-}6$

Missing from table are B,V, SST, Cu

Issues - completion of the project

Project completion depends upon progress with the LH_2 Target

Target status and major tasks are:

- *"1st Neon test" - not enough cooling power for condensing about 16000 liters of hydrogen*
- *We designed and fabricated cold helium gas precooler heat-exchange loop with ortho-para converter*
- *Assembly of the system for the new neon test in progress*
- *On November 29-30 the hydrogen safety review with outside/inside reviewers*
- *For H_2 safety we have made major modifications for the original target gas handling system*
- *Next we need to pass the facility readiness review before we can operate the target system with hydrogen*
- *After the hydrogen test, the target system will be moved to FP12*

16-liter Liquid Para-Hydrogen Target

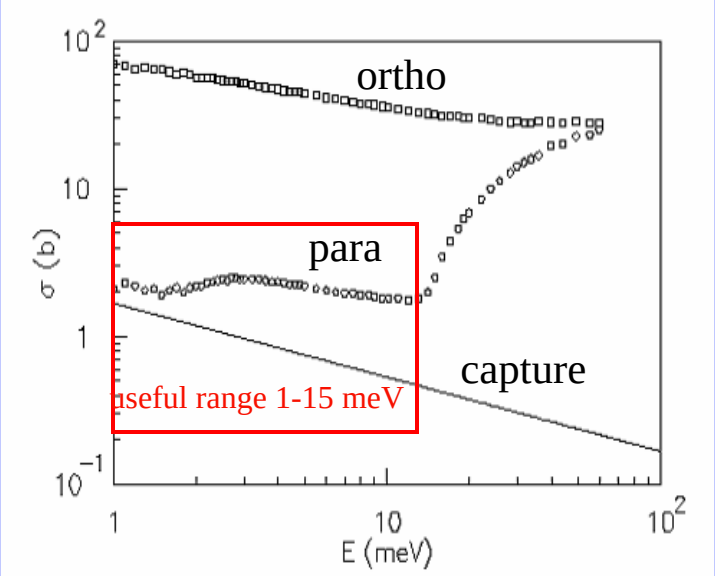

- *To maintain neutron spin in scattering a hydrogen target in para state is required.*
- *The 30 cm in diameter and 30 cm long target captures 60% of incident neutrons.*
- *At 17 K only 0.05% of LH2 is in ortho state - 1% of incident neutrons will be depolarized.*
- *Target cryostat materials selected so that false asymmetries < 10^{-10}.*

Result of the 1st Neon Test - more cooling power for liquefying 16 liters of hydrogen

Combined cold helium gas heat exchanger for precool H_2 gas and perform most of the ortho-para convertion

LH_2 Target in FP12 - tasks

For target operation in FP12 we need to accomplish the following tasks:

- *Bring the vent lines from ER2 wall to the experiment - in shop*
- *Fabricate new gas handling system with a metal enclosure - on design board*
- *Bring H_2 supply gas line from outside of ER2 to experiment - design exists*
- *Build auxiliary vacuum and gas lines - design exists*
- *Install cryostat to the FP12 cave and connect lines*
- *Test the system, the last is a test with neon*
- *Have IDWs in place*
- *Have hydrogen safety review by locals*
- *Have facility readiness review*
- *Have target system tested with hydrogen*
- *The experiment ready for beam*

Schedule - main milestones

In shed:

Cryostat modifications finished	*Nov-3 new Nov -7*
Original GHS improvements finished	*Nov-3 new Nov-18*
Reassembly of cryostat with pre cooler	*Nov-10 new Nov-21*
2nd neon testing -cooldown over	*Nov-20 new Dec-9*
H2 safety review	*Nov-29-30*
Readiness review	*Dec-09 new Dec-15*
H2 testing complete	*Dec-23*
Target testing in shed over	*Dec-23*

At ER2 in FP12:

Complete piping installation	*Dec-16*
Install cryostat in FP12	*Jan-15*
Test cryostat and other system	*Jan-30*
Have a readiness review	*Feb-10*
Perform H2 testing in FP12	*Feb-28*
Start NPDGamma production	*May-*

when beam is delivered

About costs

- *Shed base costs* *$20k*
- *For FP12* *$70k*
  - *M&S* *$50k*
  - *0.1 FTE* *$20k*
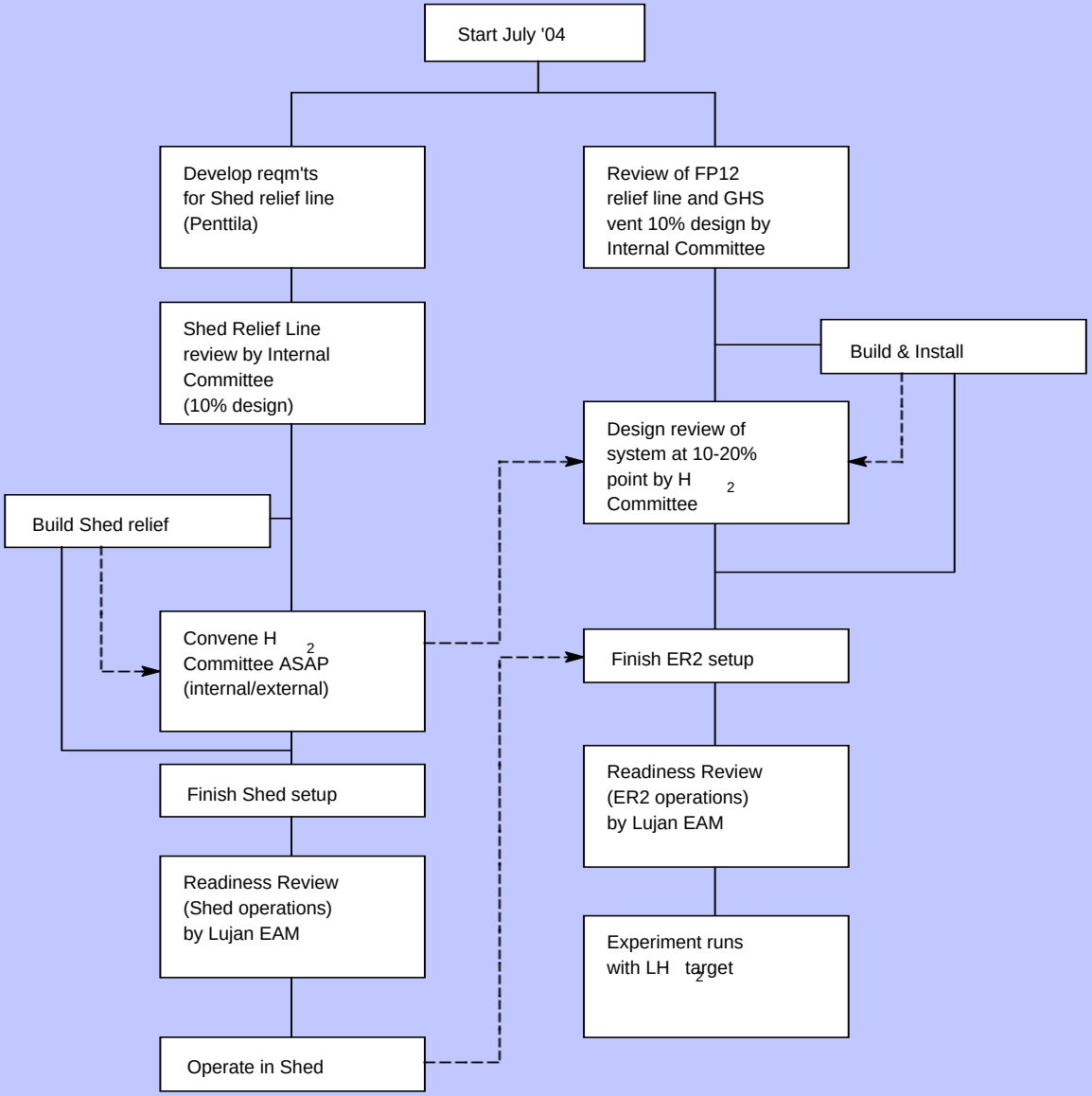
Flow chart for the shed and ER2 LH2 target effort