Model of npdγ Hydrogen Vent System at the SNS

npdγ complete, upstream view

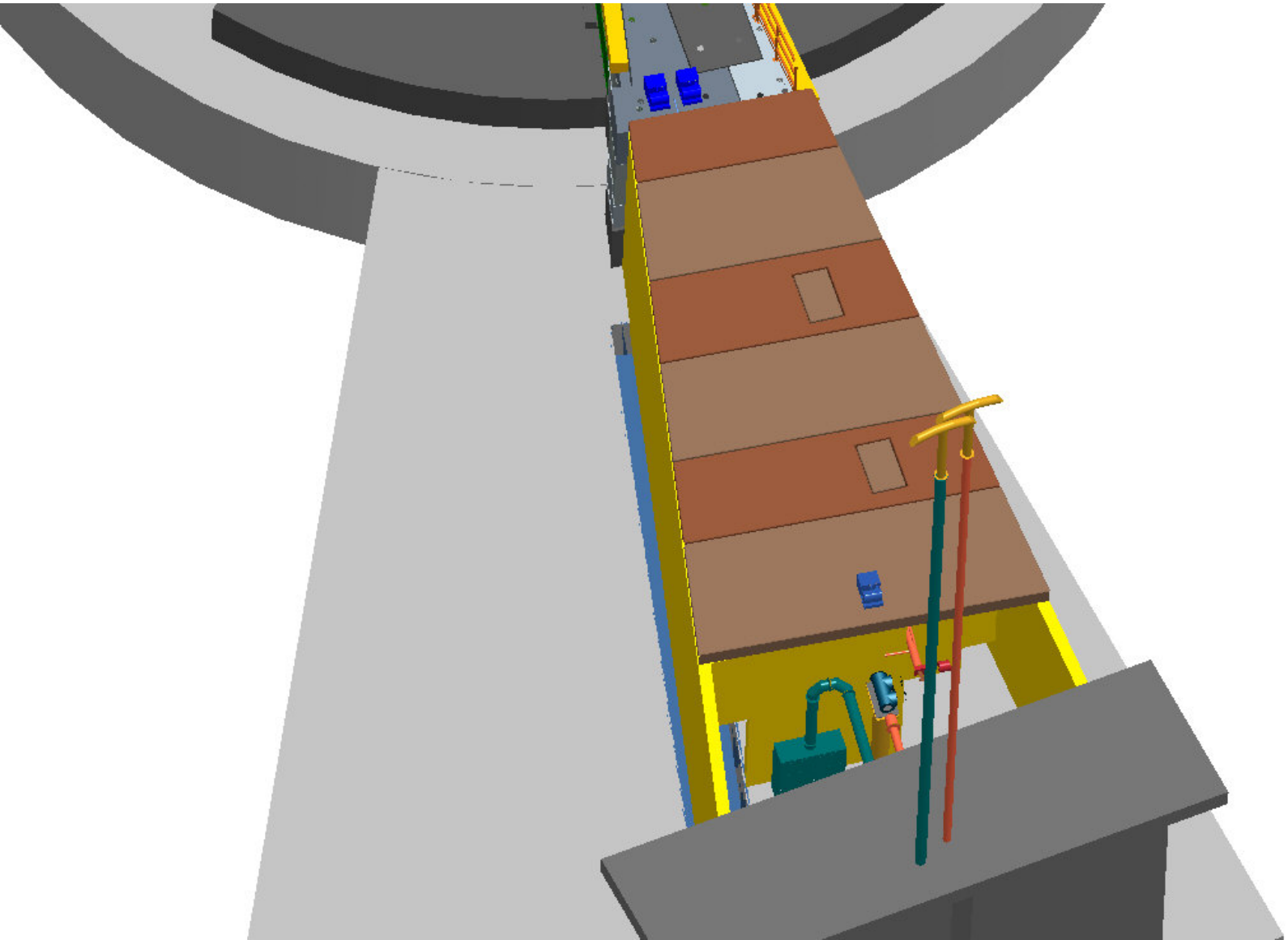

npdγ complete, downstream view

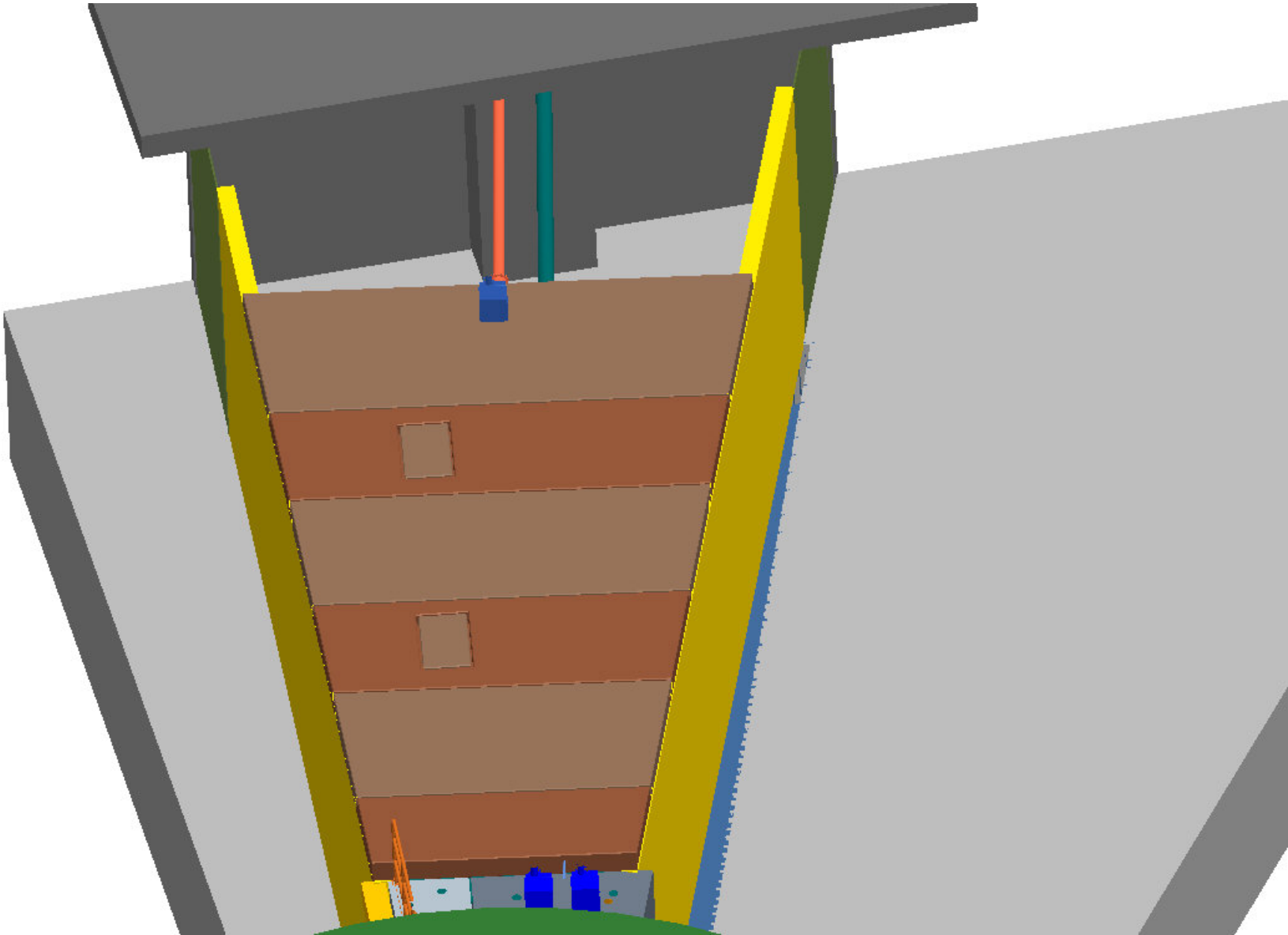

npdγ complete, viewed from bl12

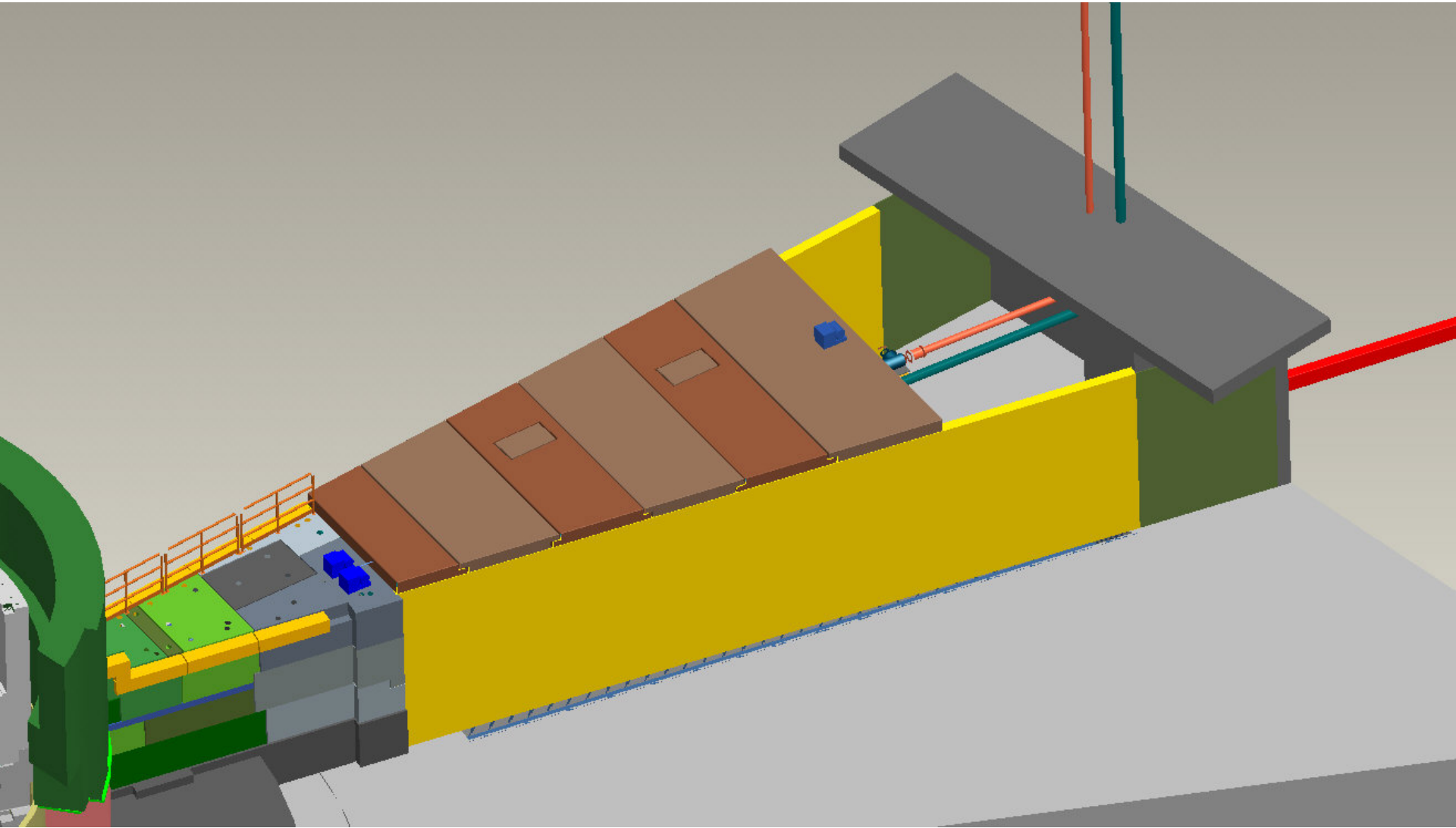

npdγ complete, viewed from bl14

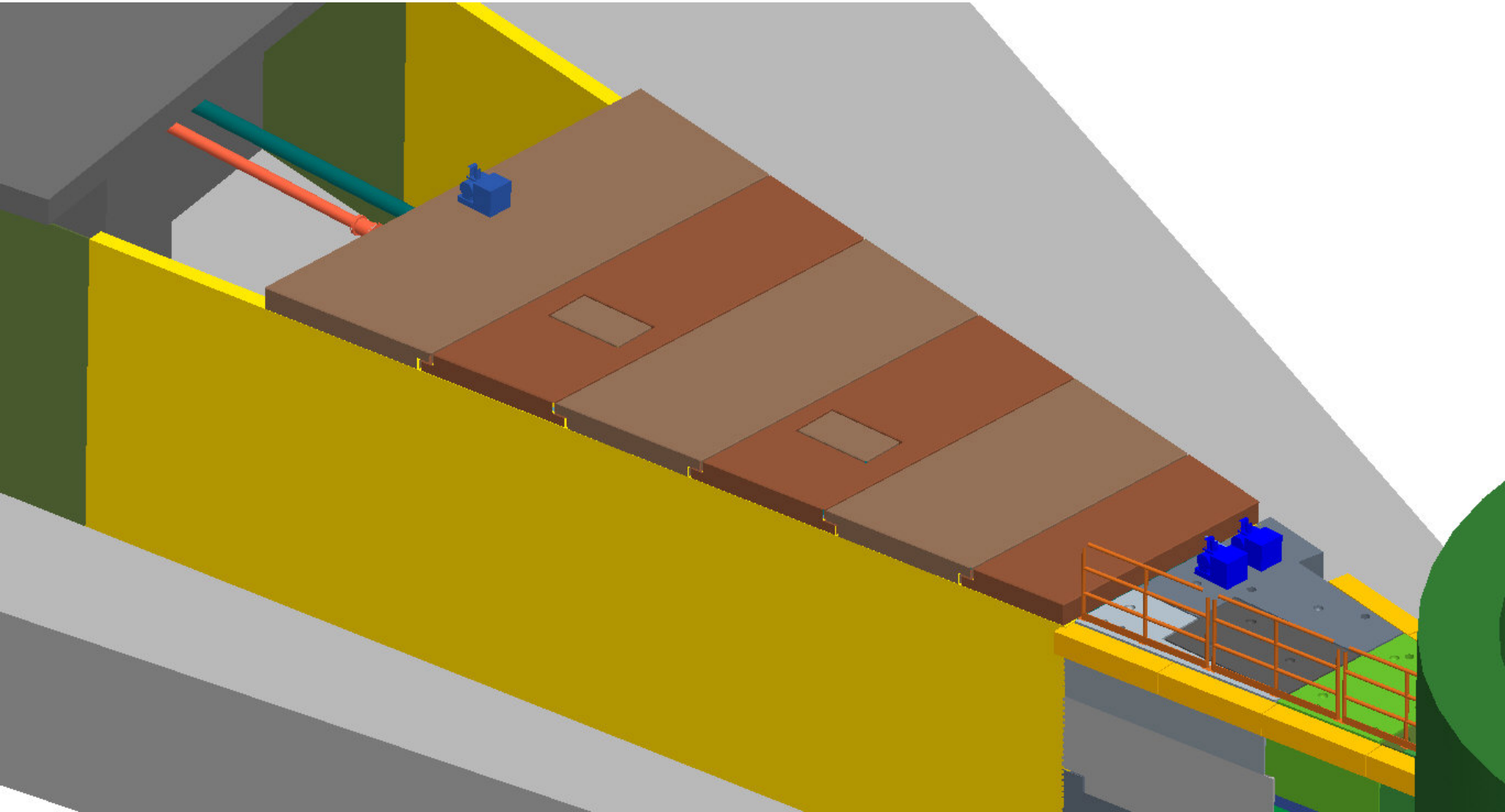

npdγ no roof, upstream, view 1

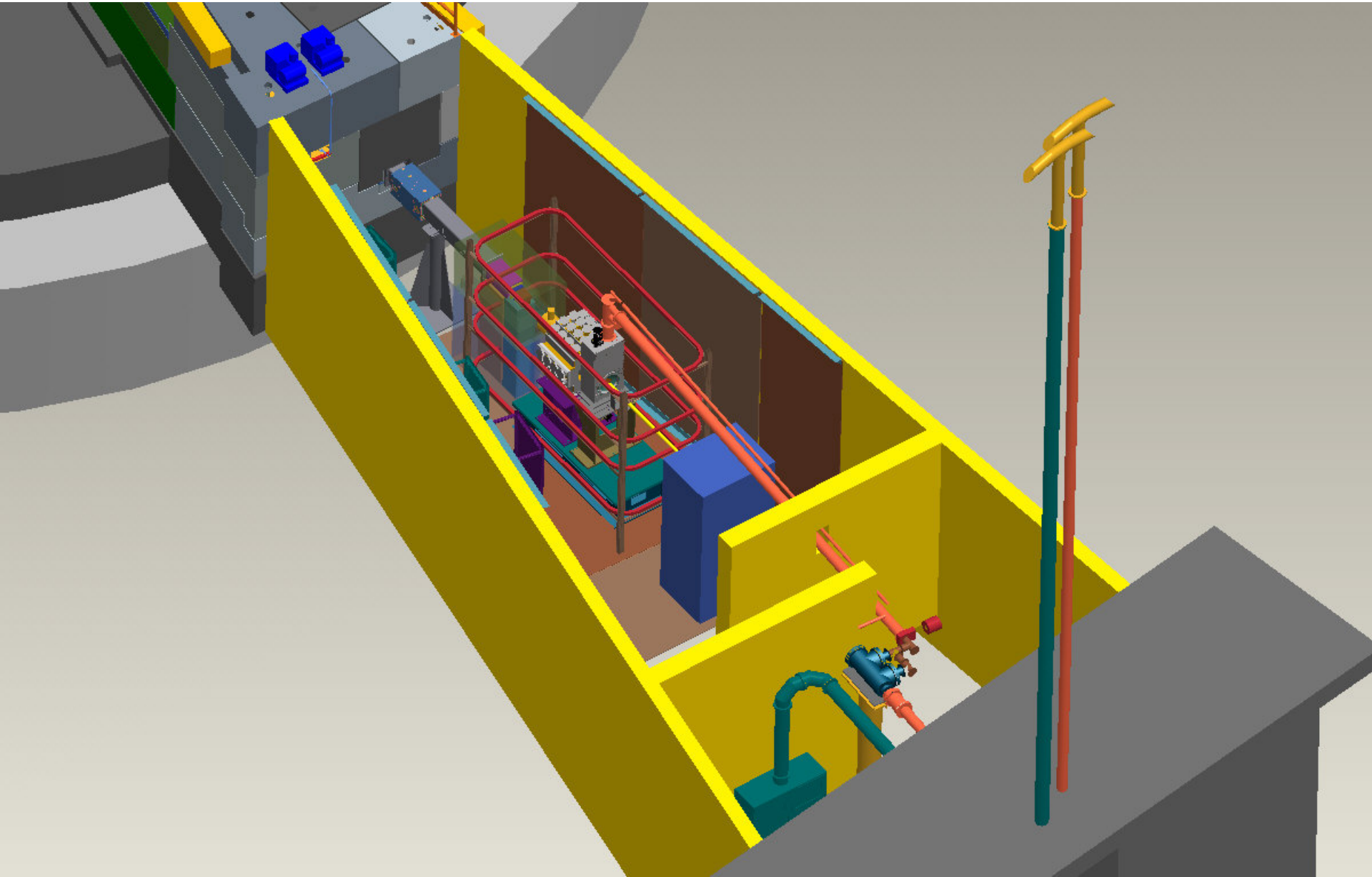

npdγ no roof, upstream, view 2

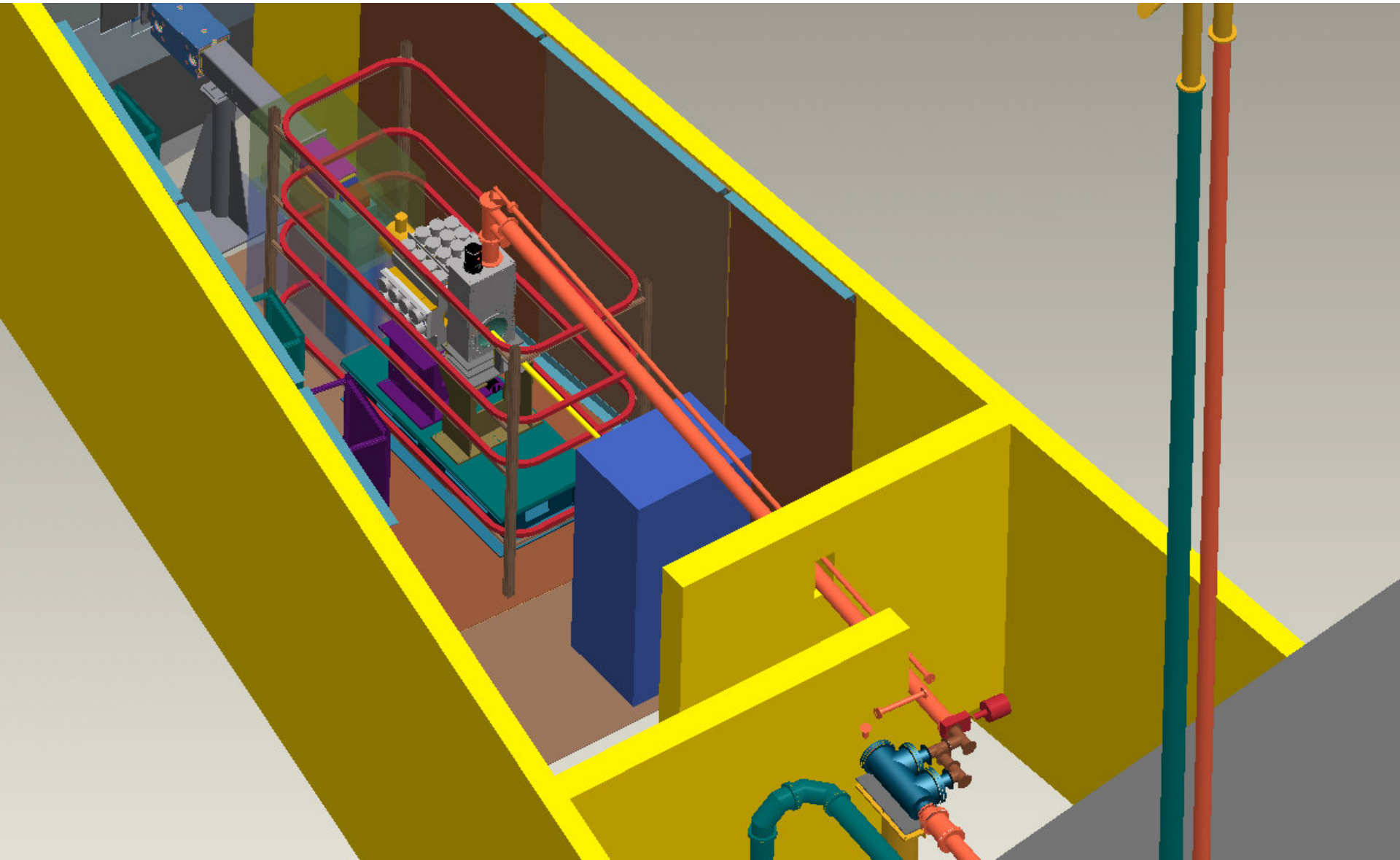

npdγ no roof, upstream, view 3

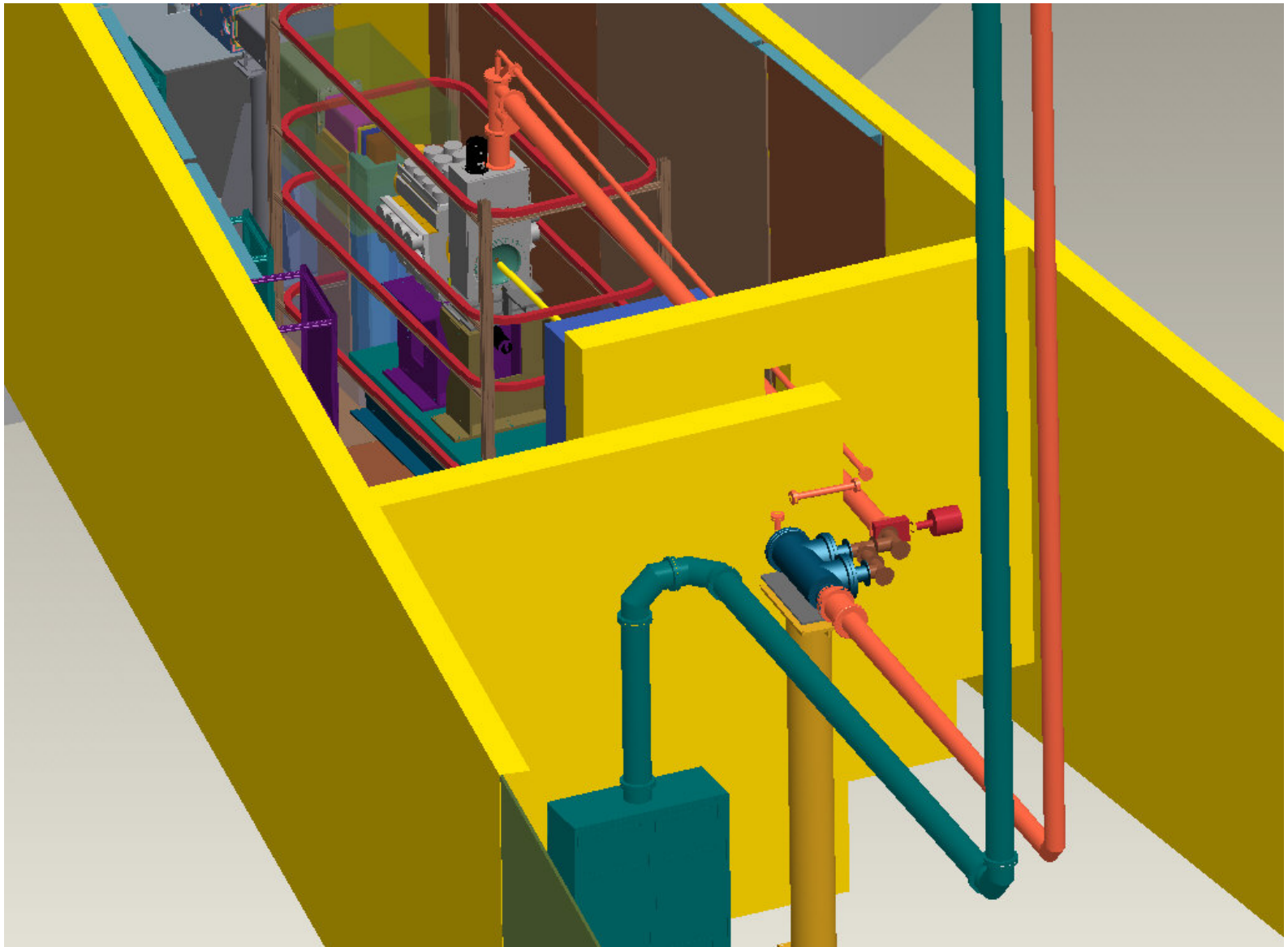

npdγ no roof, upstream, view 4

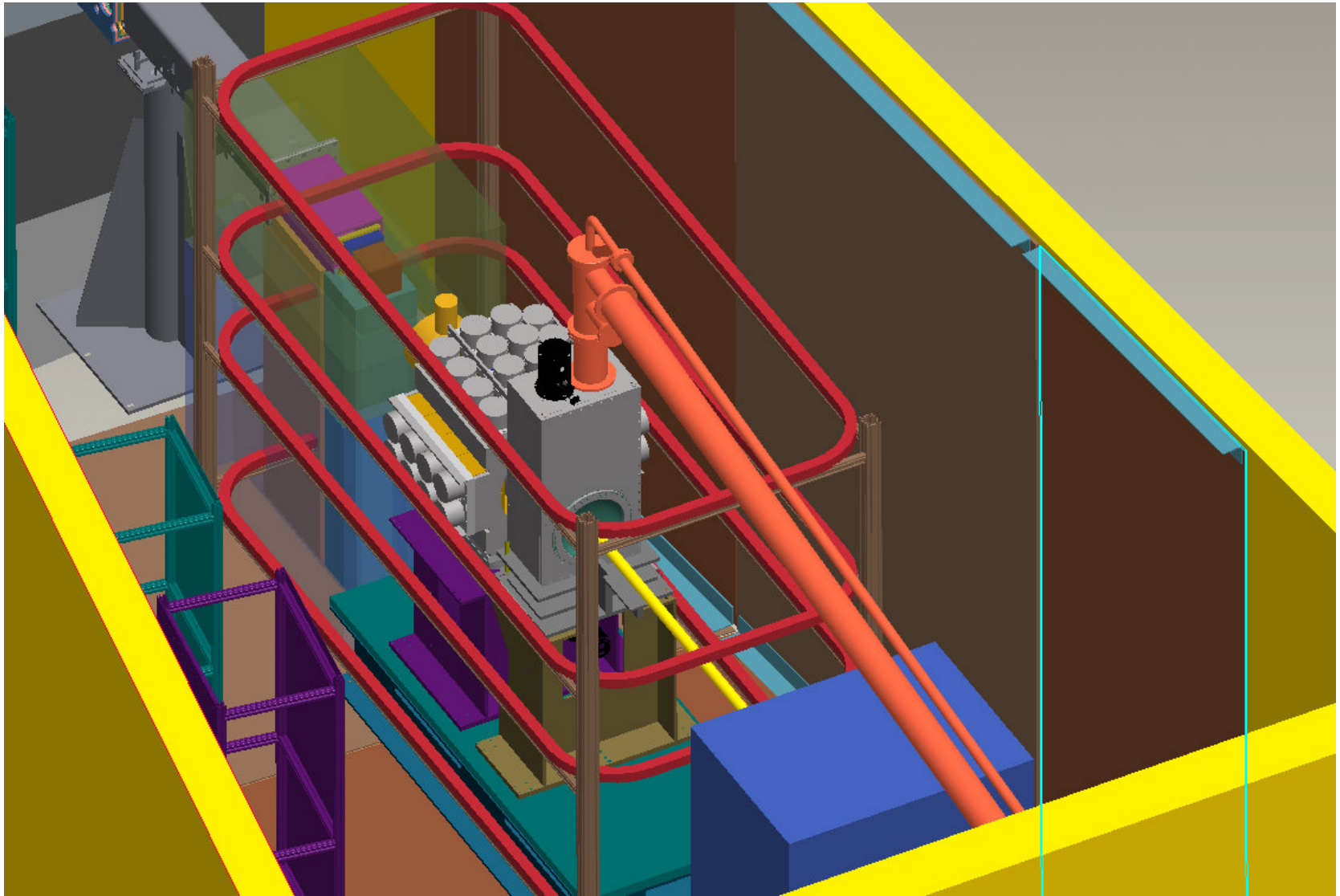

npdγ no roof, downstream, view 1

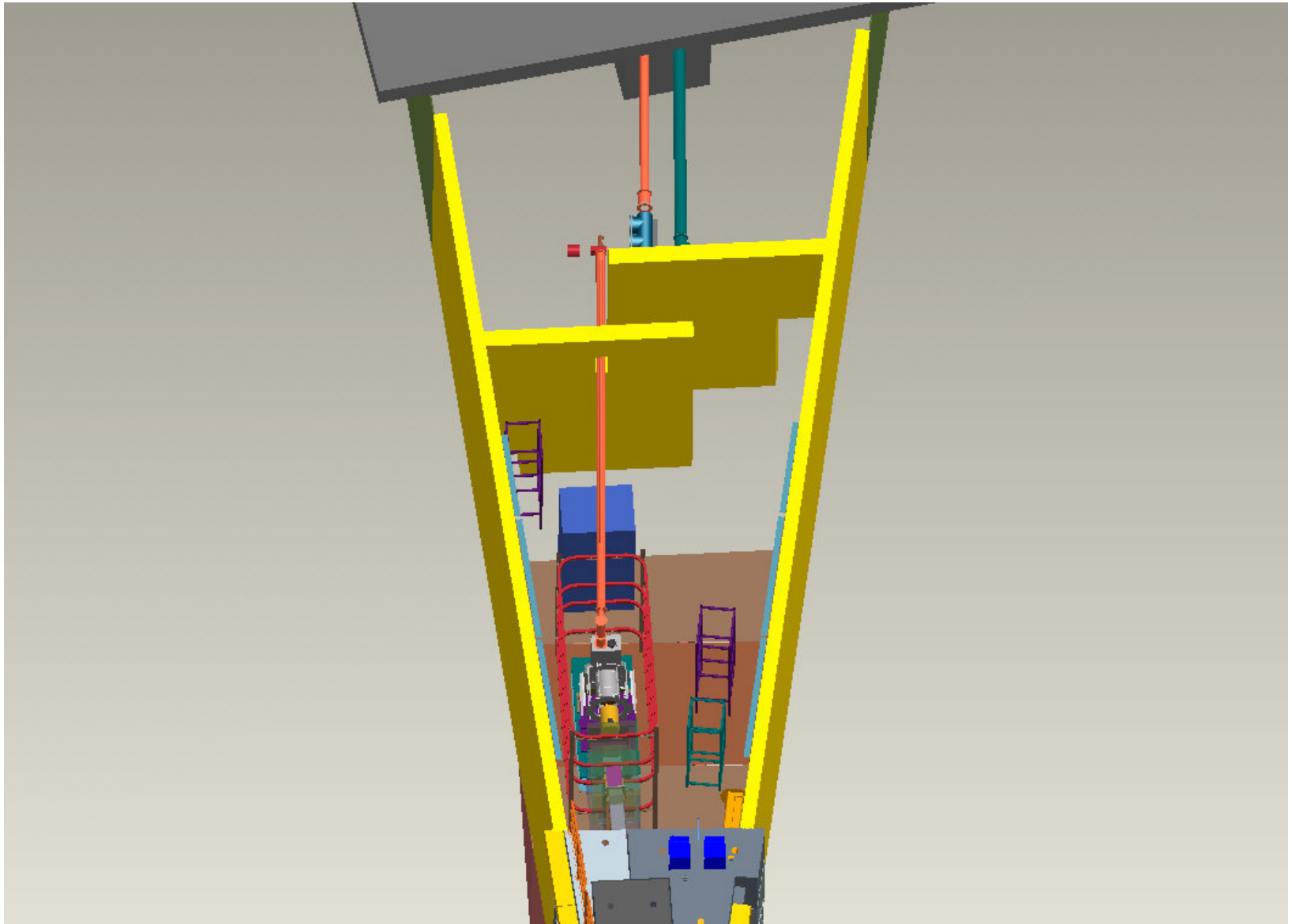

npdγ no roof, downstream, view 2

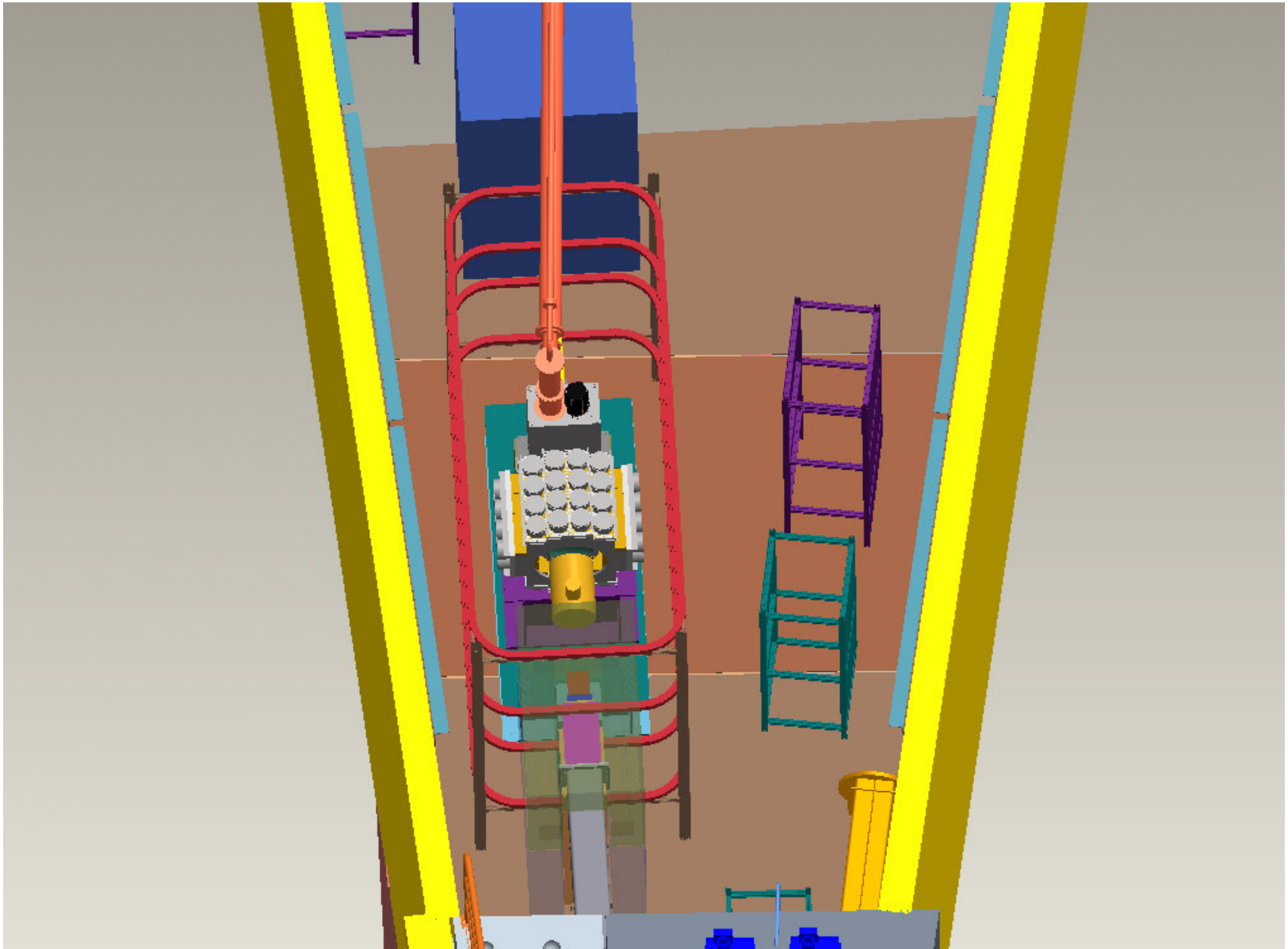

npdγ viewed from bl12, no wall, view 1

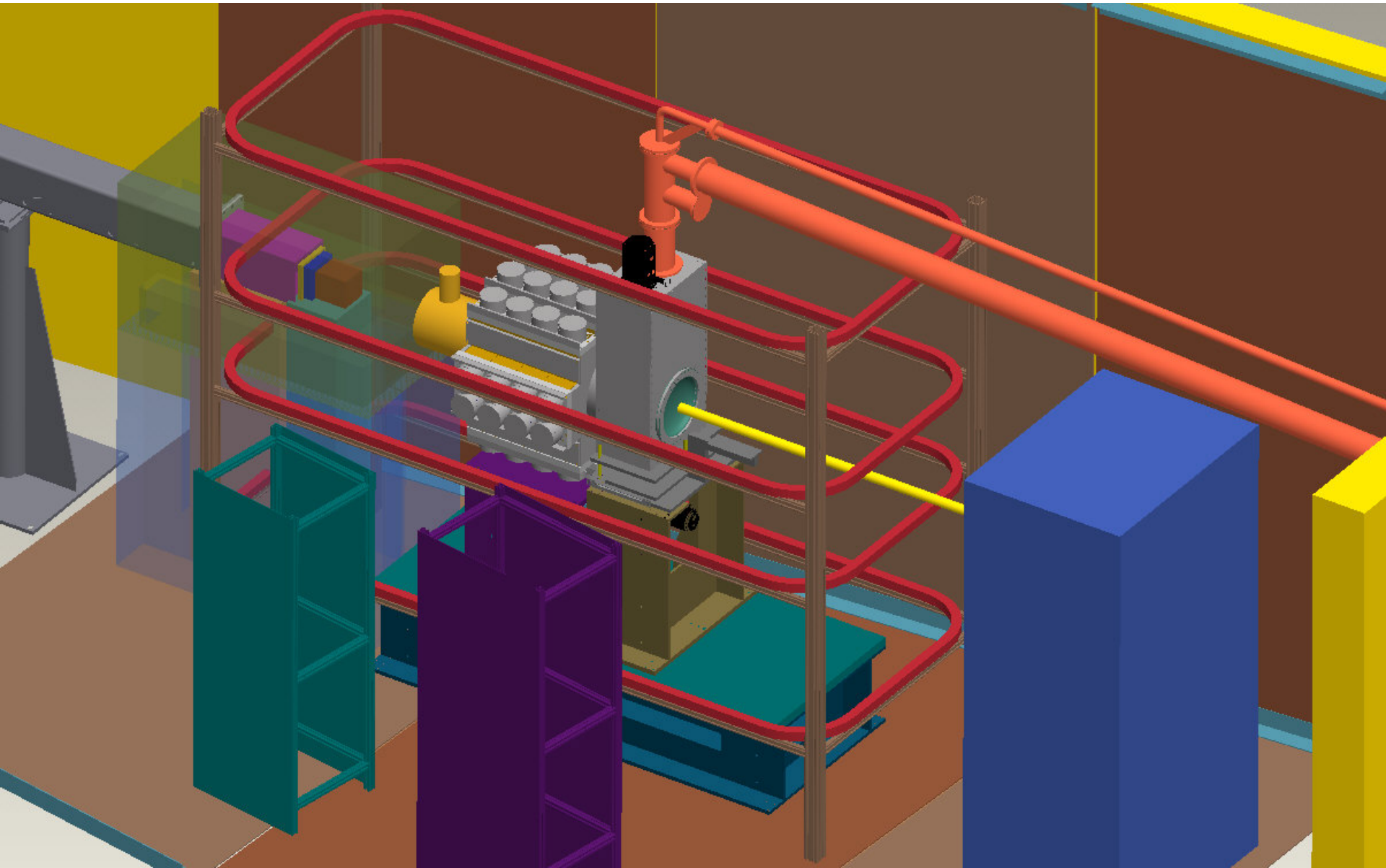

npdγ viewed from bl12, no wall, view 2

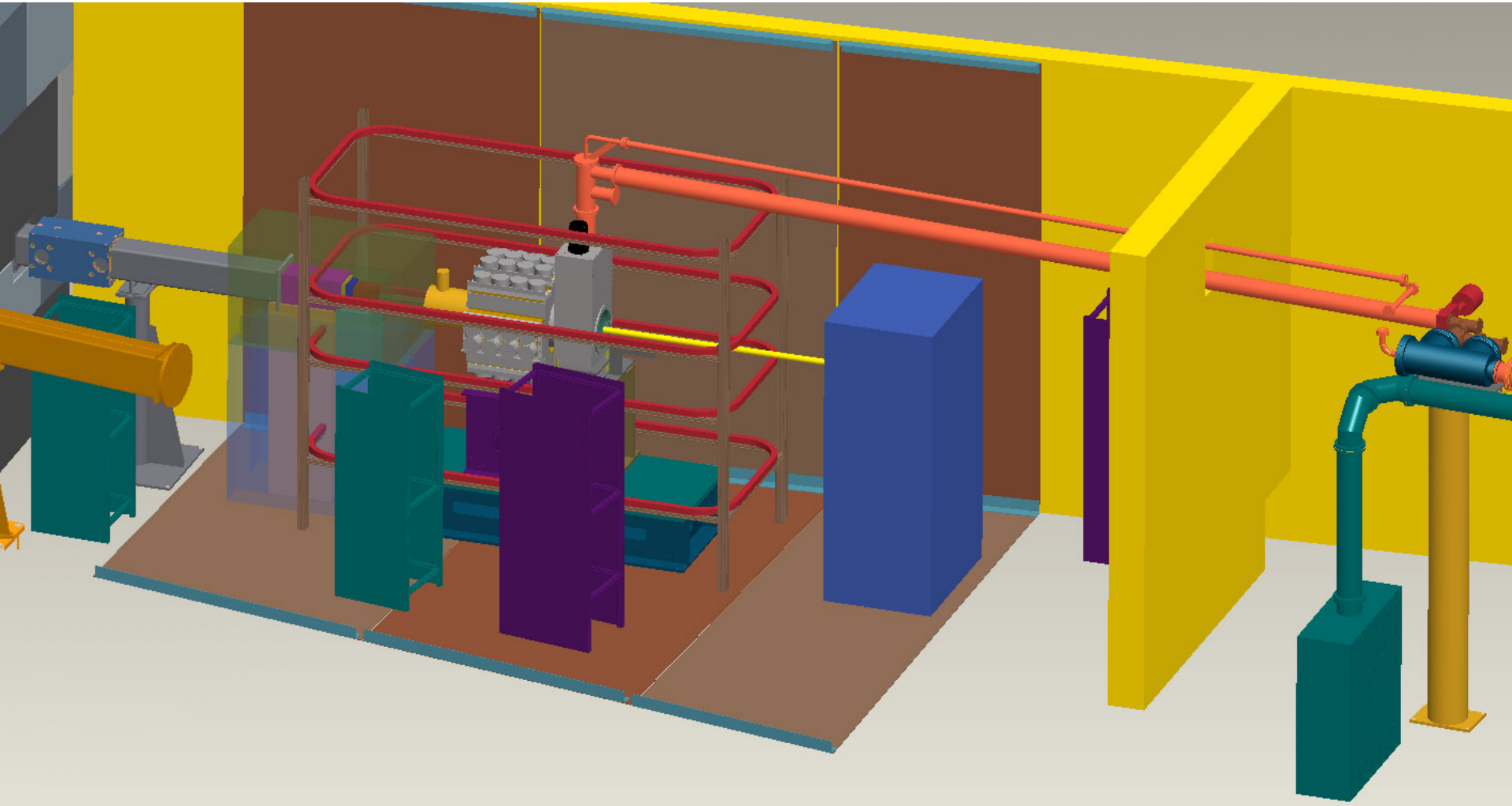

npdγ viewed from bl14, no wall

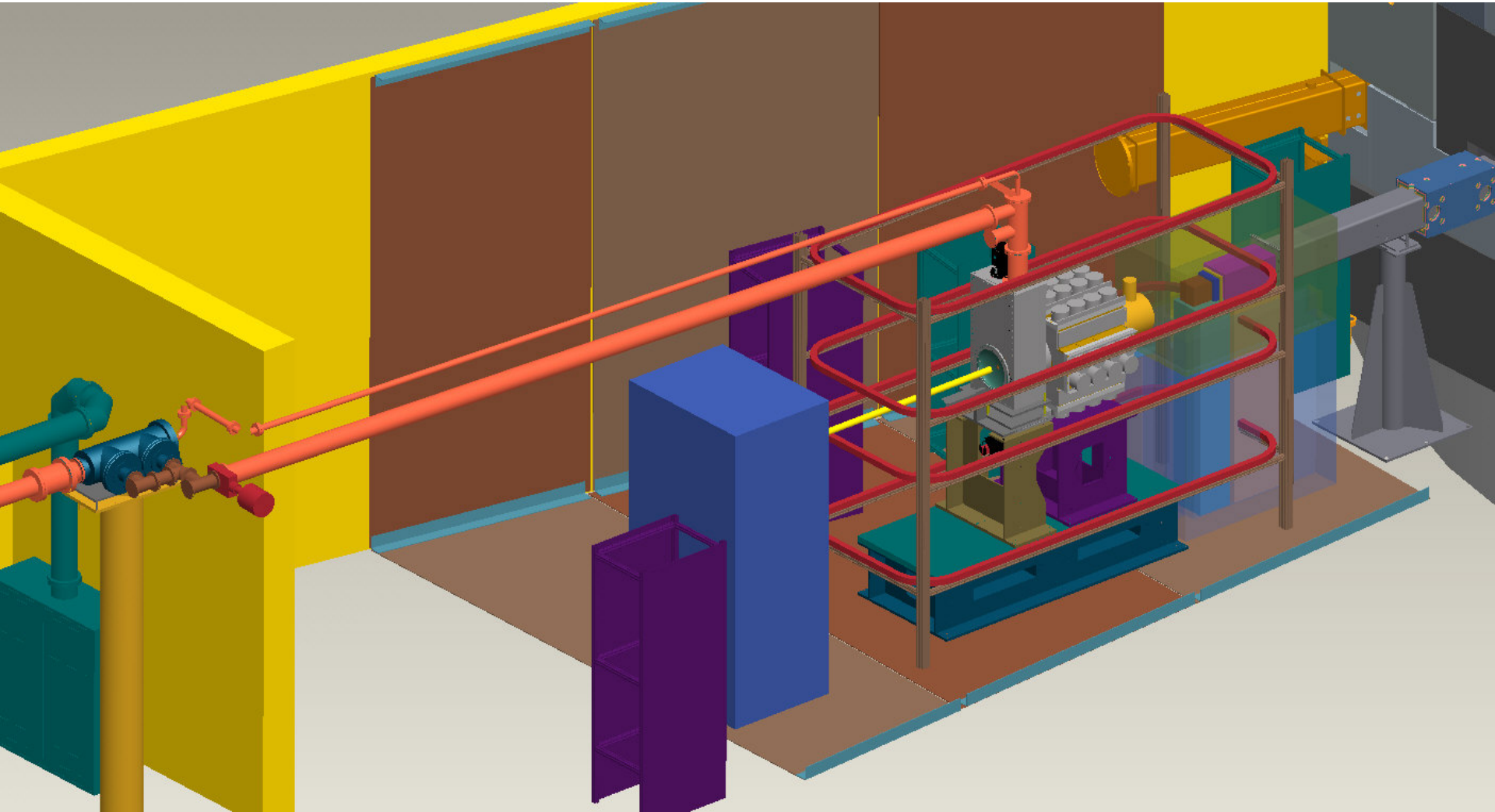

npdγ viewed from above, view 1

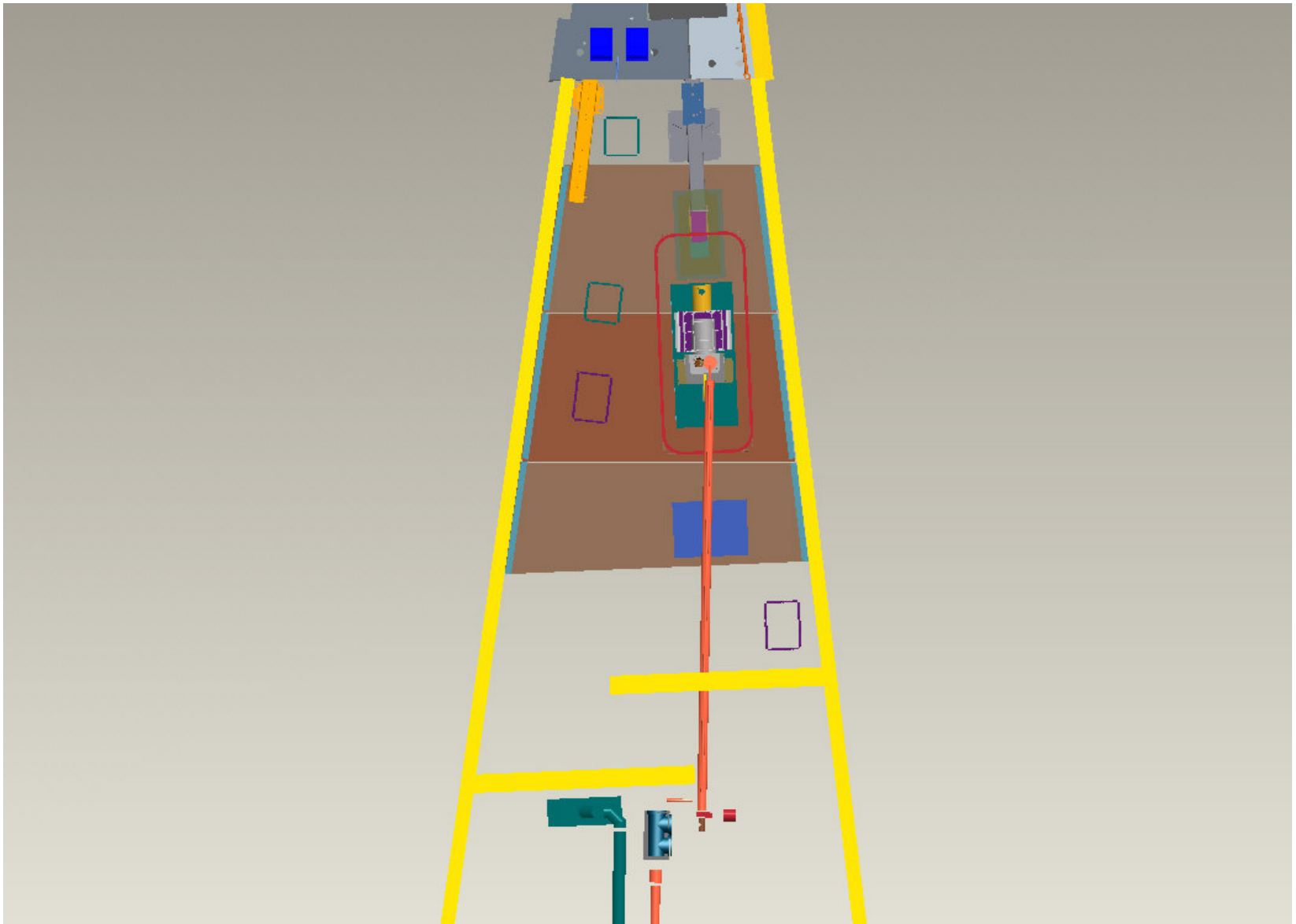

npdγ viewed from above, view 2

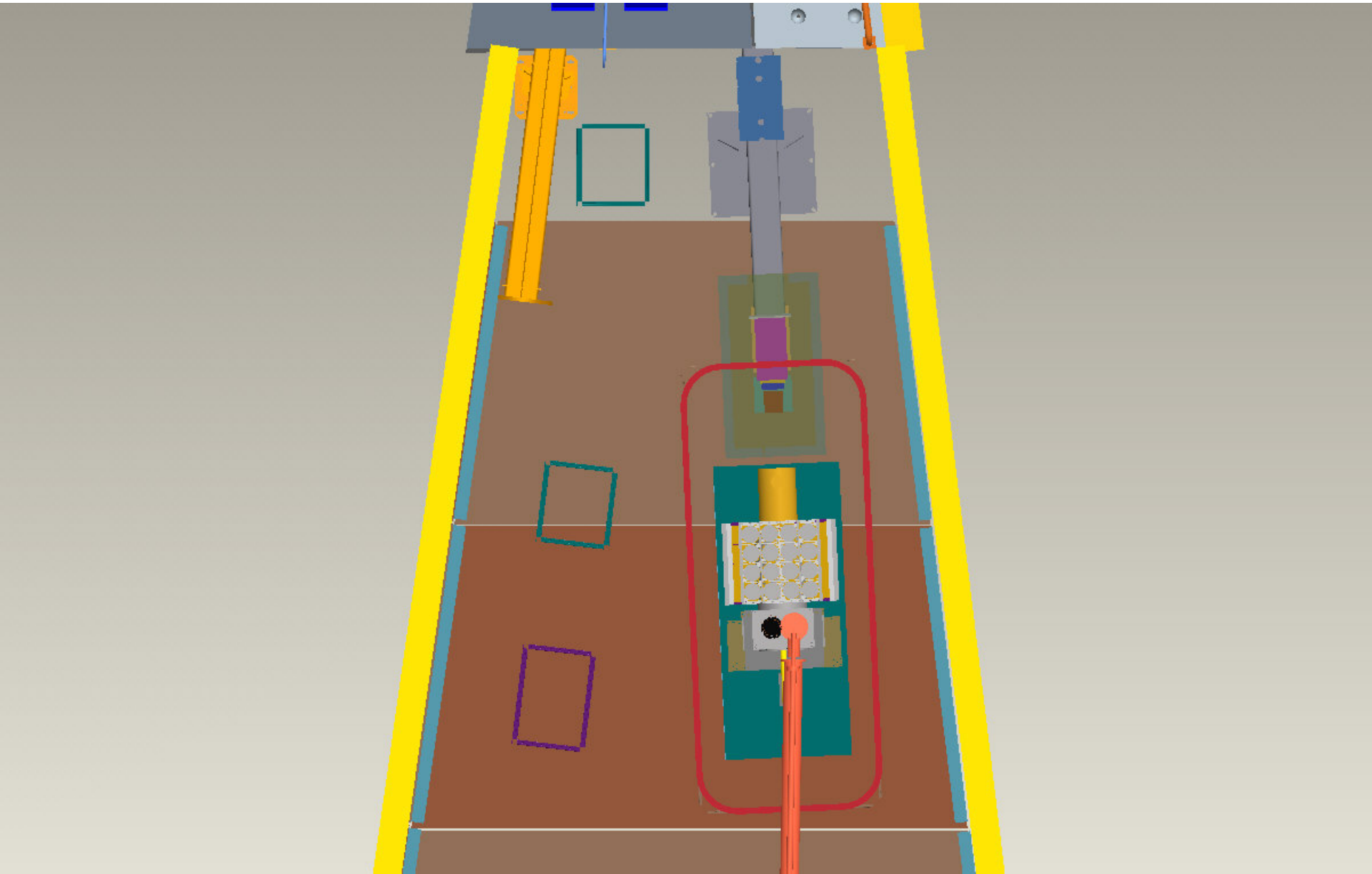

npdγ close up

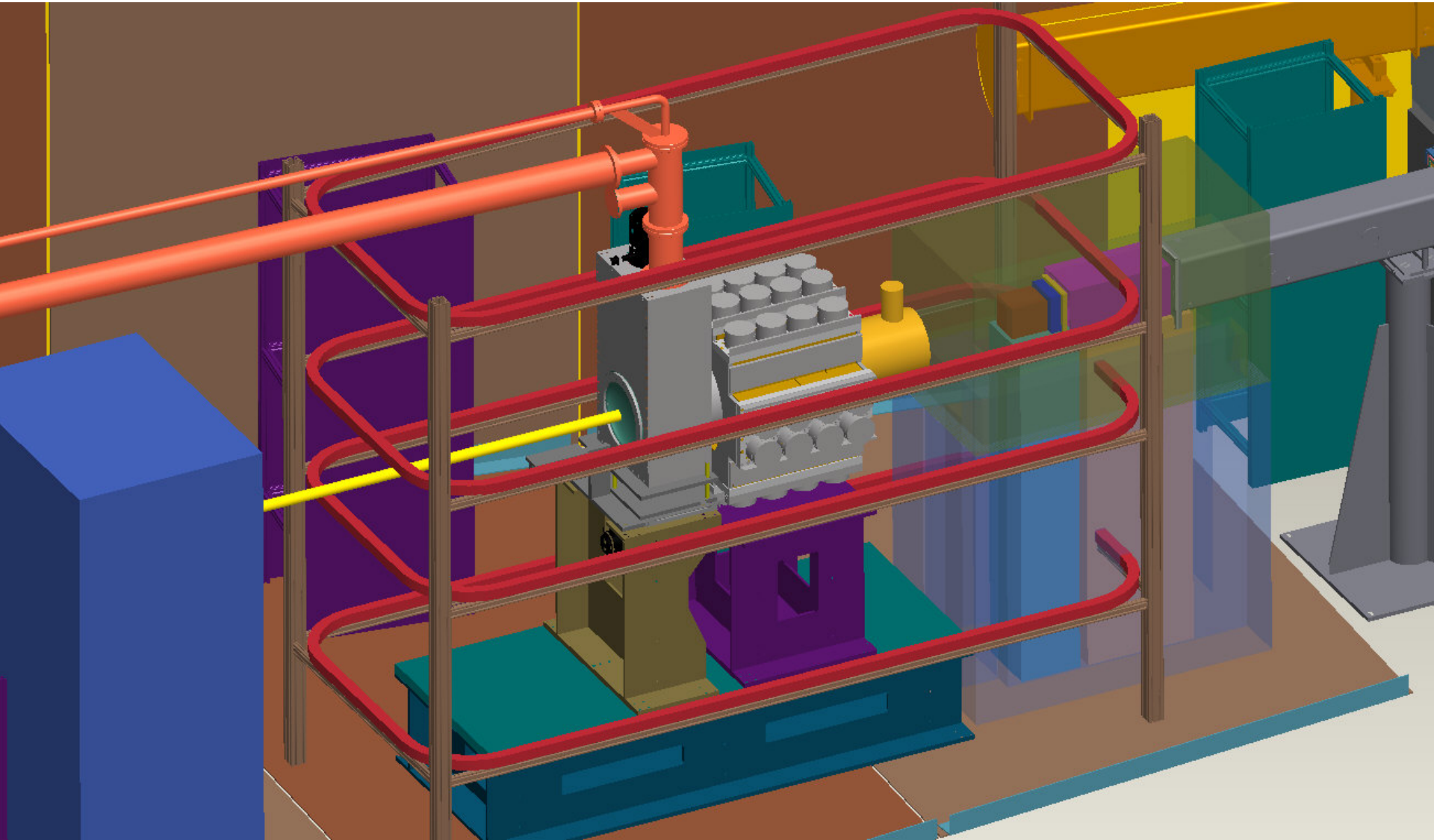

npdγ relief chamber

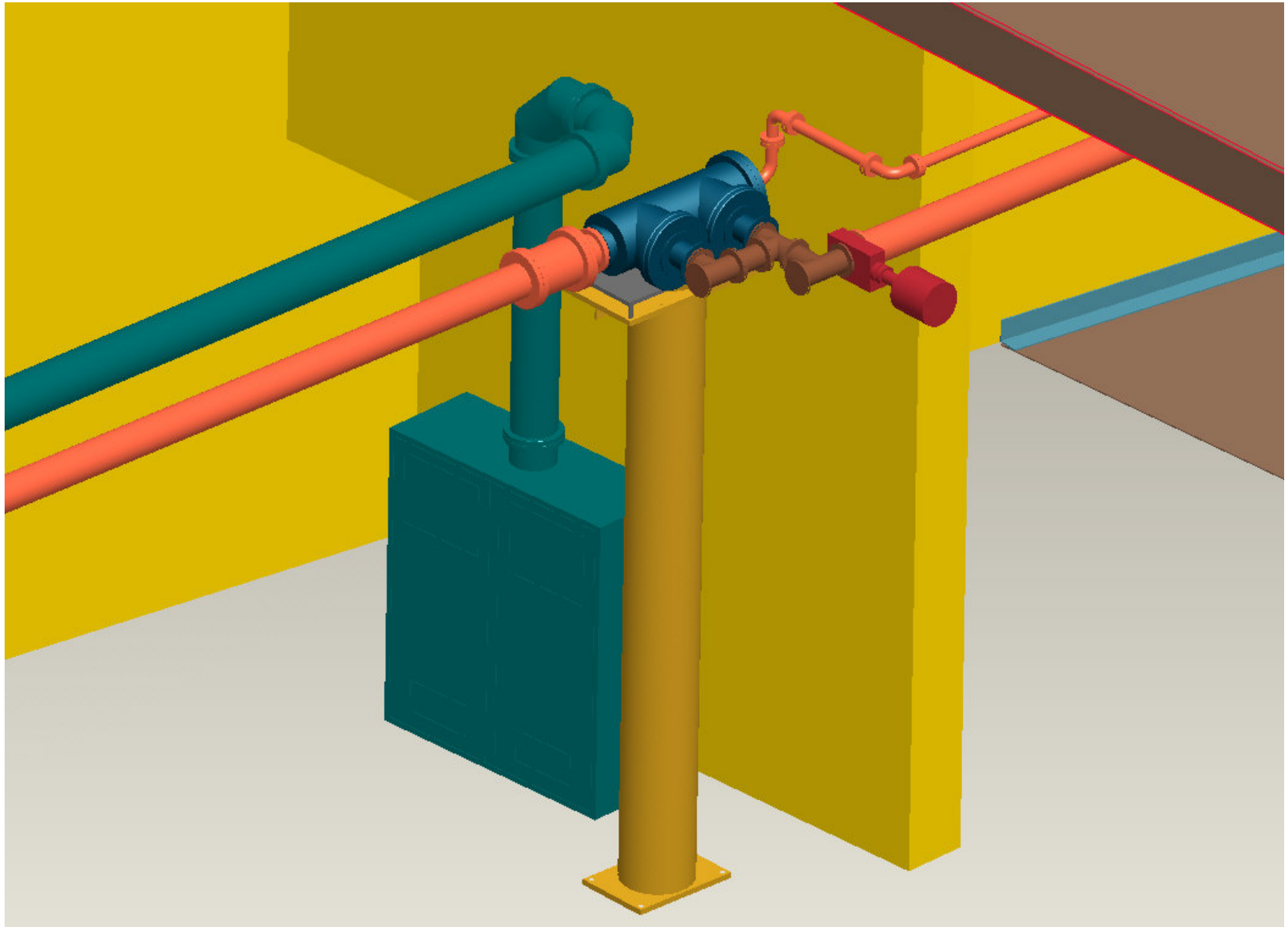

building vent stacks, view 1

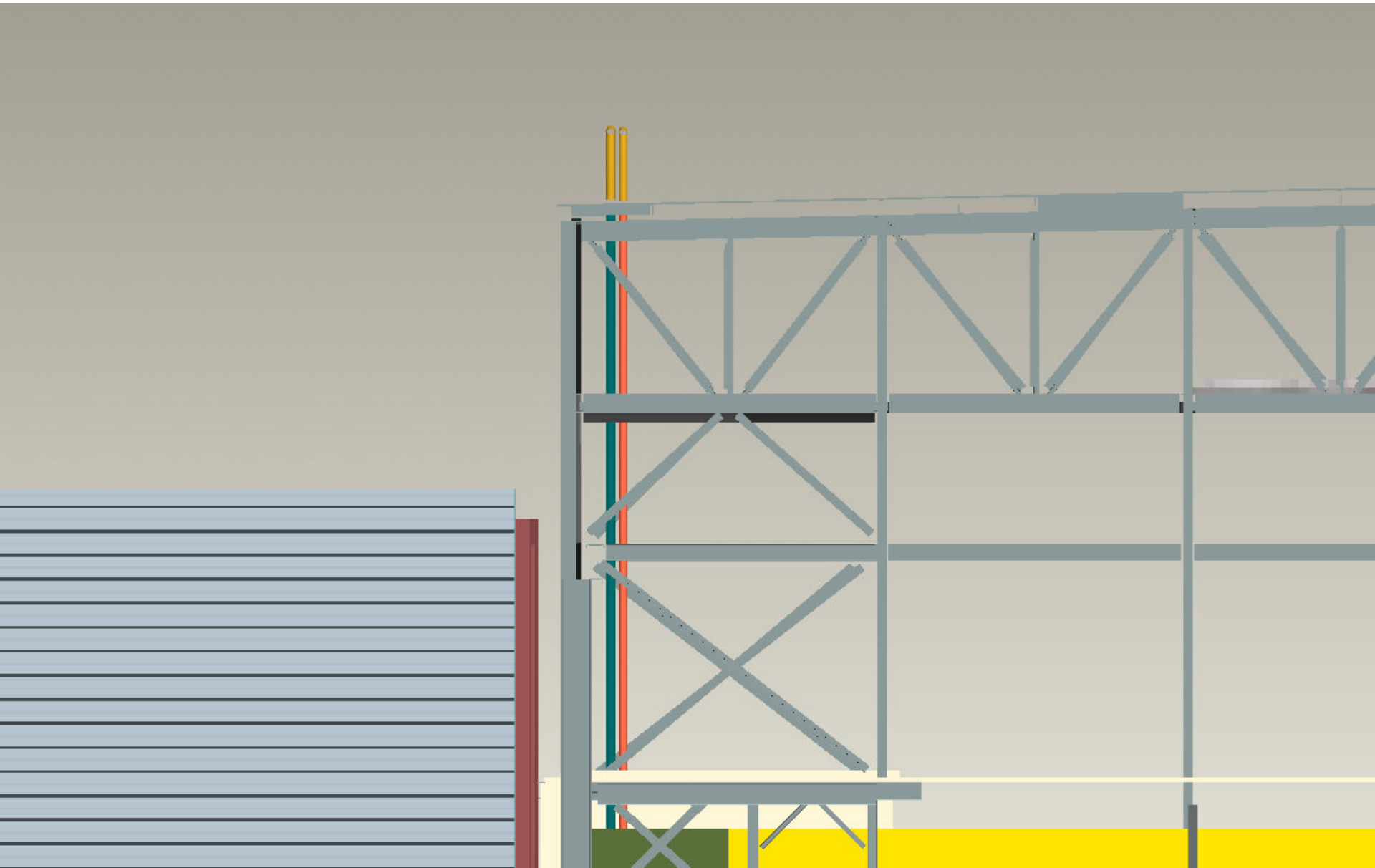

building vent stacks, view 2

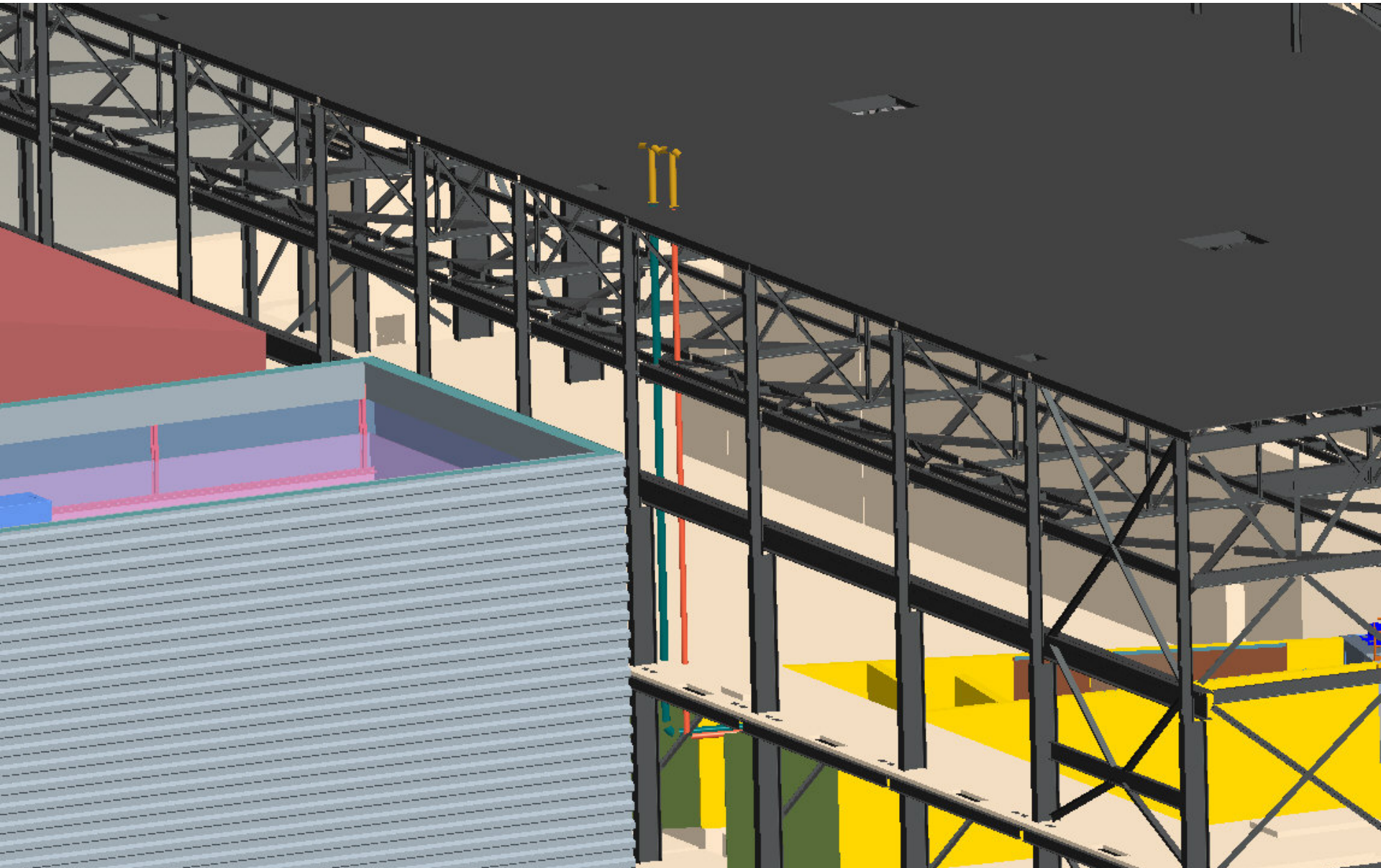

building vent stacks, view 3

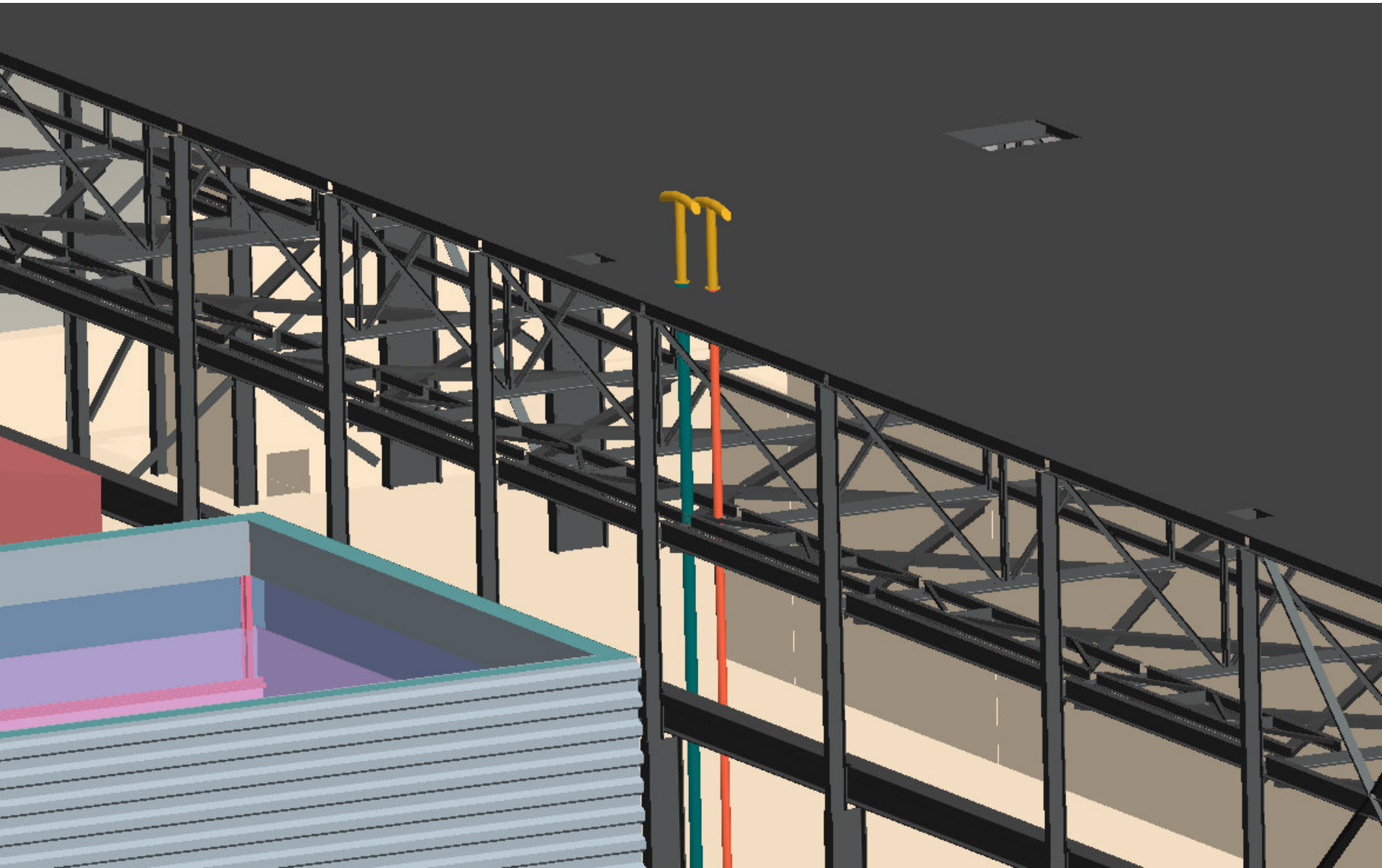

building vent stacks, view 4

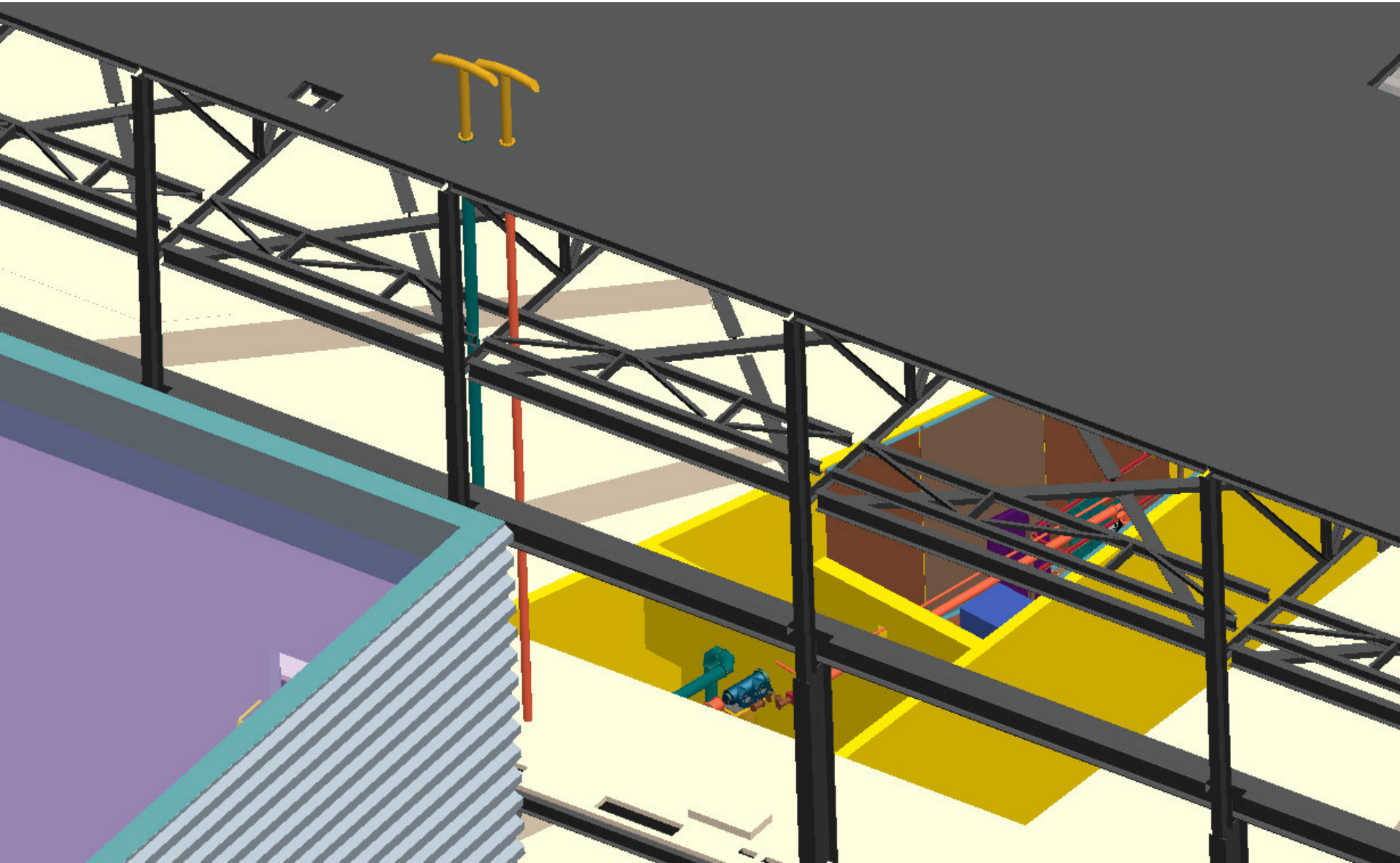

building vent stacks, view 5

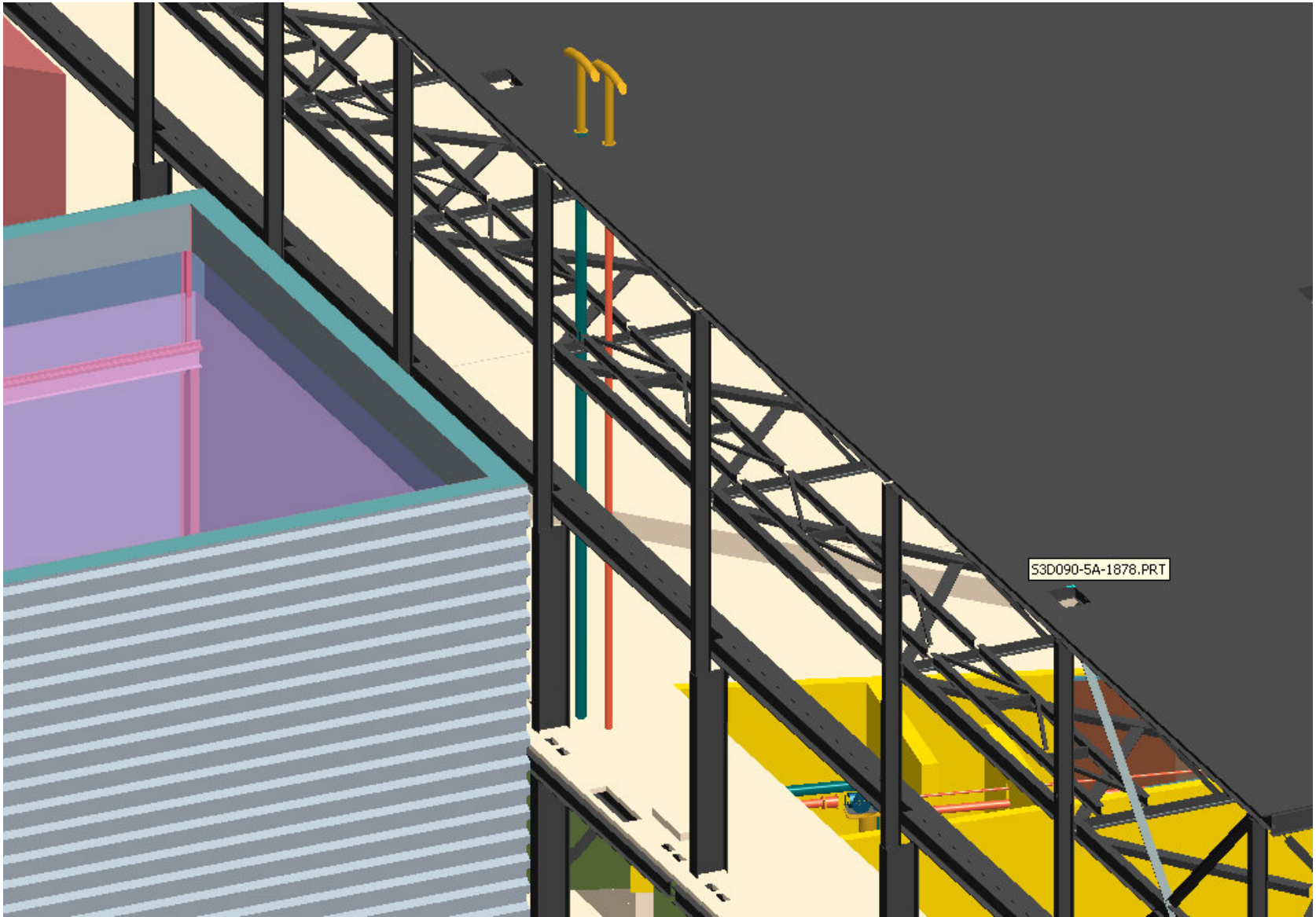

building vent stacks, view 6

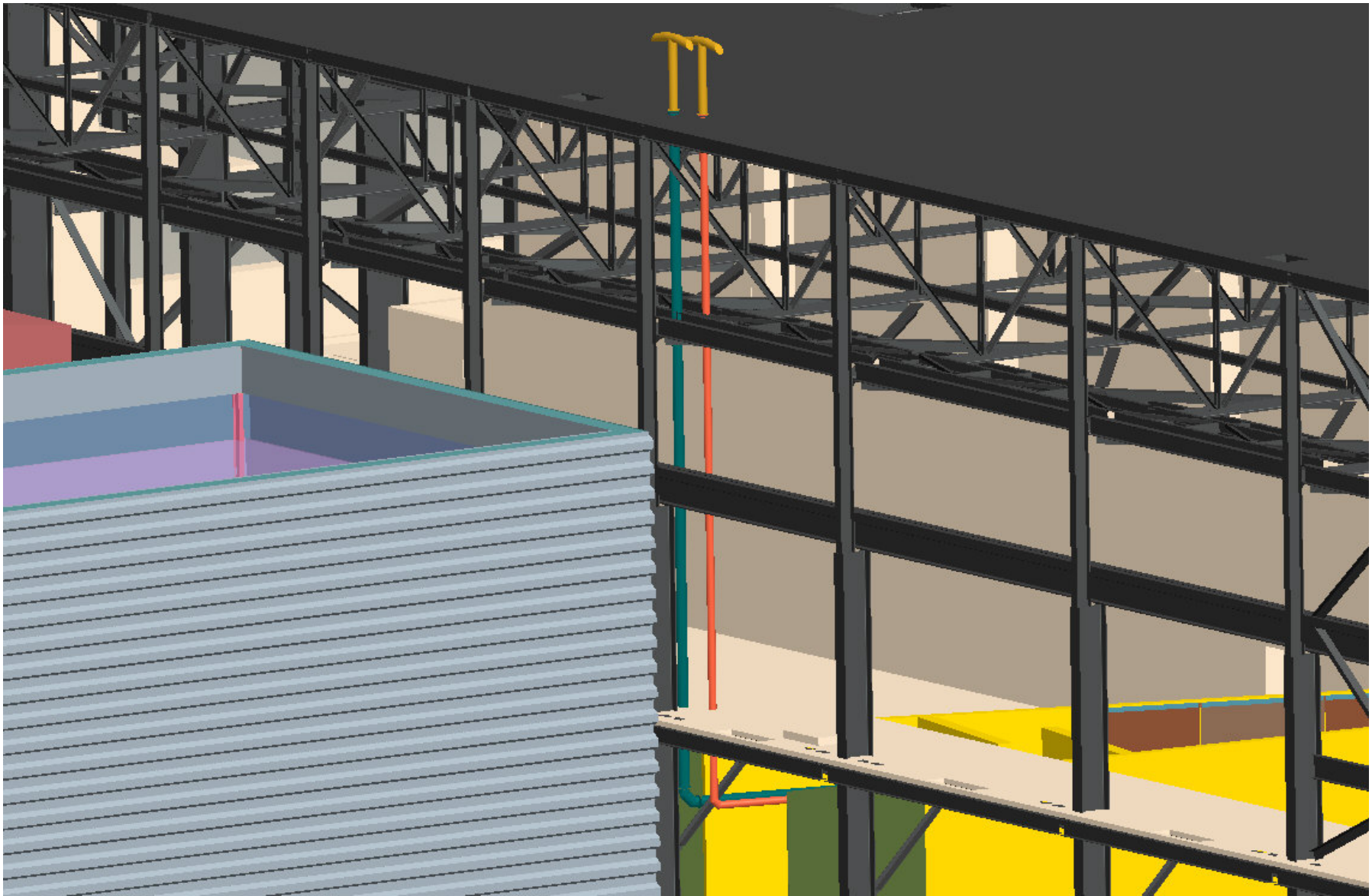

vent stacks under the mezzanine

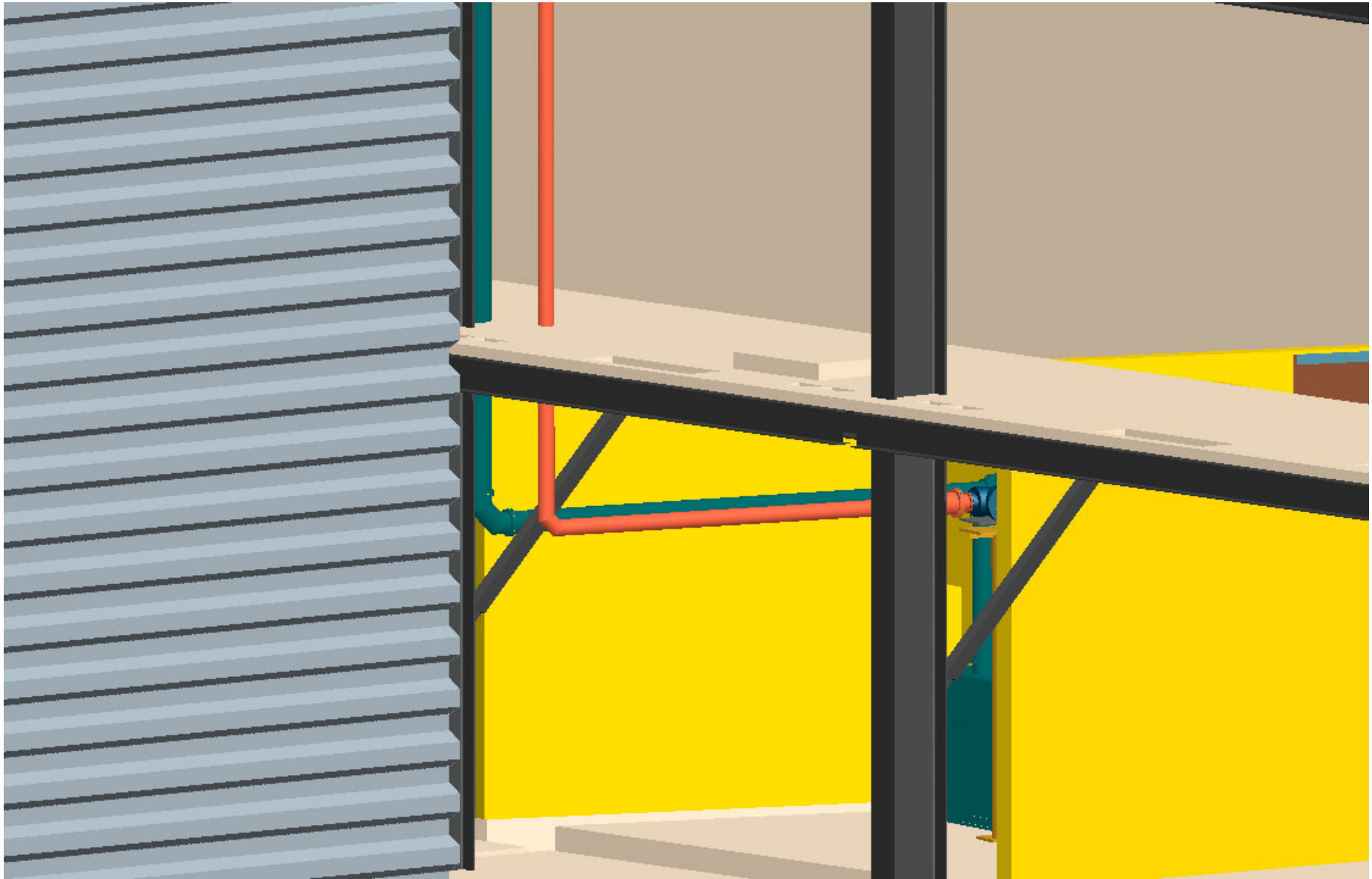

NO REPRESENTATION OR WARRANTY, EXPRESSED OR IMPLIED, IS MADE AS TO THE ACCURACY, COMPLETENESS OR USEFULNESS OF THE INFORMATION OR STATEMENTS CONTAINED IN THESE DRAWINGS, OR THAT THE DISCLOSURE OF ANY INFORMATION, APPARATUS, METHOD OR PROCESS DISCLOSED IN THESE DRAWINGS MAY NOT INFRINGE PRIVATE RIGHTS OF OTHERS. NO LIABILITY IS ASSUMED WITH RESPECT TO THE USE OF, OR FOR DAMAGES RESULTING FROM THE USE OF, ANY INFORMATION, APPARATUS, METHOD OR PROCESS DISCLOSED IN THESE DRAWINGS. DRAWINGS MADE AVAILABLE FOR INFORMATION TO BIDDER ARE NOT TO BE USED FOR OTHER PURPOSES AND ARE TO BE RETURNED UPON REQUEST OF THE FORWARDING CONTRACTOR.

REVISIONS

REV	DESCRIPTION OF CHANGE	BY	APPR	DATE
-	-	-	-	MM/DD/YY

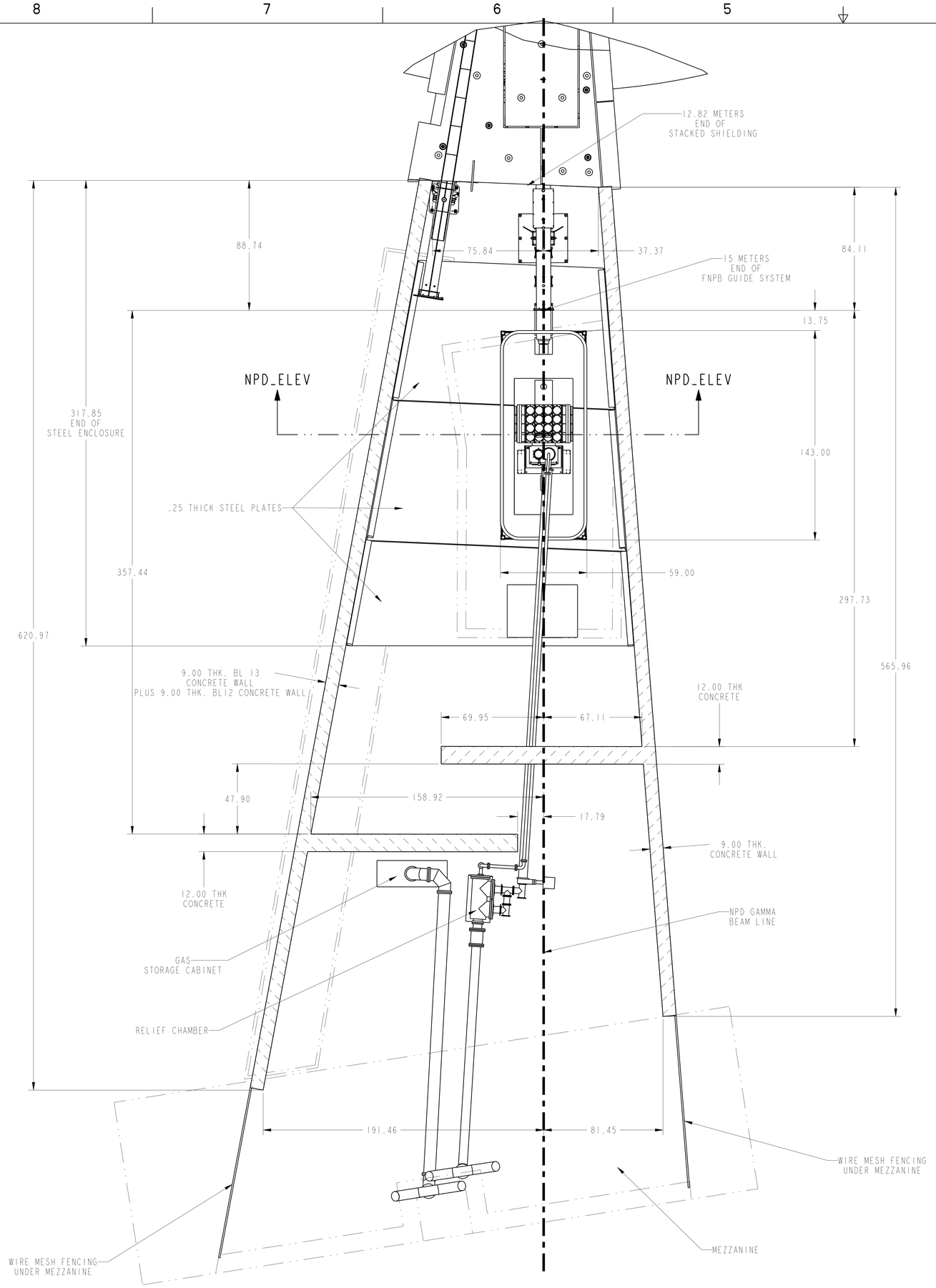

PLAN VIEW

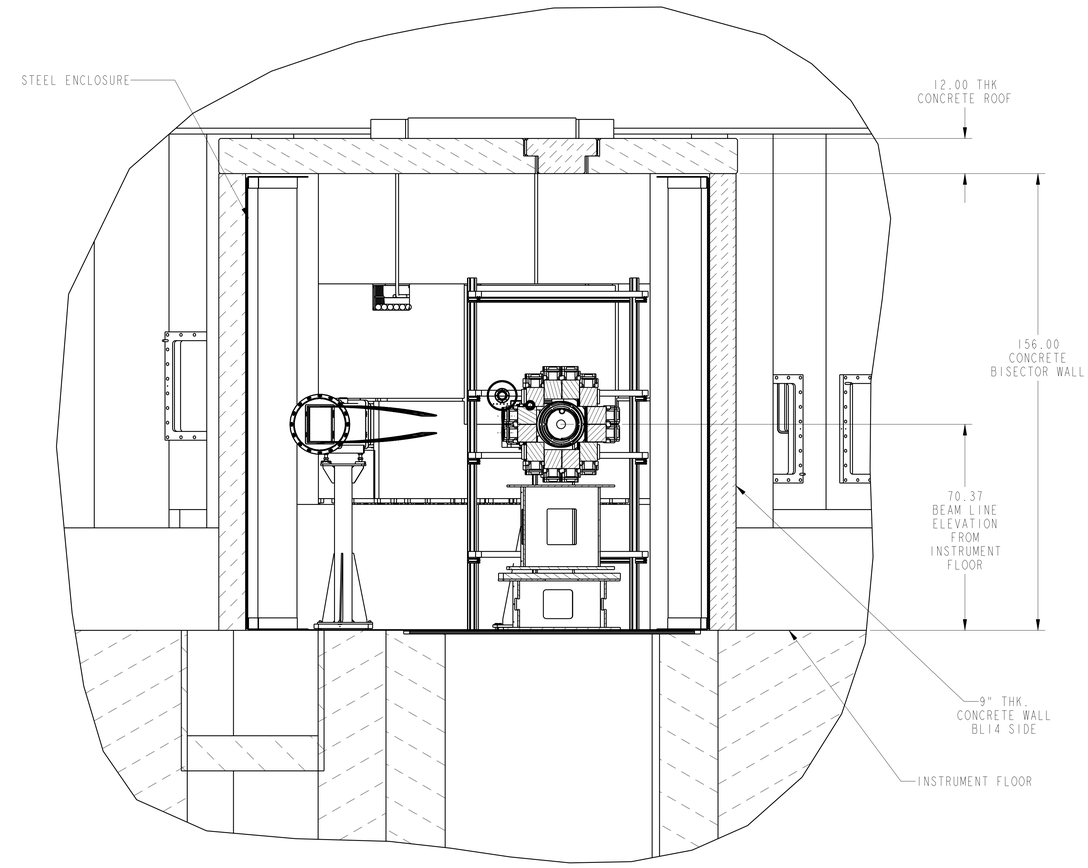

NPD ELEV
UPSTREAM SECTION

NPD GAMMA

QUALITY VERIFICATION	
DOCUMENTS REQUIRED	APPLICABLE
MATERIAL MILL TEST REPORT	-
LEAK TEST REPORT	-
CLEANING CERT	-
WELD / BRAZE INSPECTION REPORT	-
HEAT TREAT REPORT (W/CHART)	-
DIMENSIONAL REPORT	-
MATERIAL SELLER CERT	-
FUNCTIONAL TEST REPORT	-
-	-
-	-
-	-
QA REP	DATE
X	/ /

DIMENSIONS ARE IN INCHES
DRAFTING STANDARD: ASME Y14.100
DIMENSIONING AND TOLERANCING IN ACCORDANCE WITH ASME Y14.5M, 1994
DO NOT SCALE DRAWING

DEFAULT TOLERANCES

LINEAR	ANGULAR
X.X ±0.1	±0.5°
X.XX ±0.01	
X.XXX ±0.005	

REMOVE ALL BURRS AND BREAK SHARP EDGES: .06
SURFACE ROUGHNESS: 125 RMS MAX
THIRD ANGLE PROJECTION

APPROVALS		
DESIGNER	R. HUERTO	DATE 10/17/06
DRAFTER	R. HUERTO	DATE 10/18/06
CHECKER	X	DATE / /
VERIFIER	X	DATE / /
ENGINEER	X	DATE / /
SCIENTIST	X	DATE / /
MANAGER	X	DATE / /
DIVISION	X	DATE / /
QA LEVEL 3	CHANGE SYS 3	RELEASE Level 1
SNS PROCEDURE	SNS-TS-G001	

THIS DRAWING IS THE PROPERTY OF
OAK RIDGE NATIONAL LABORATORY
DEPARTMENT OF ENERGY UNDER U.S. GOVERNMENT CONTRACT DE-AC05-00OR22725
OAK RIDGE, TENNESSEE

SPALLATION NEUTRON SOURCE

FUNDAMENTAL NEUTRON PHYSICS BEAM LINE 13 PERIMETER SHIELDING

SIZE	DRAWING NUMBER	REV
E	NPD GAMMA SHIELDING	-

SCALE	CAD MODEL	SHEET
1/400	107160103M8E8700A001-1	1 of 3

THIS DRAWING PREPARED ON Pro/ENGINEER

CAD NO. NPD_GAMMA_SHIELDING

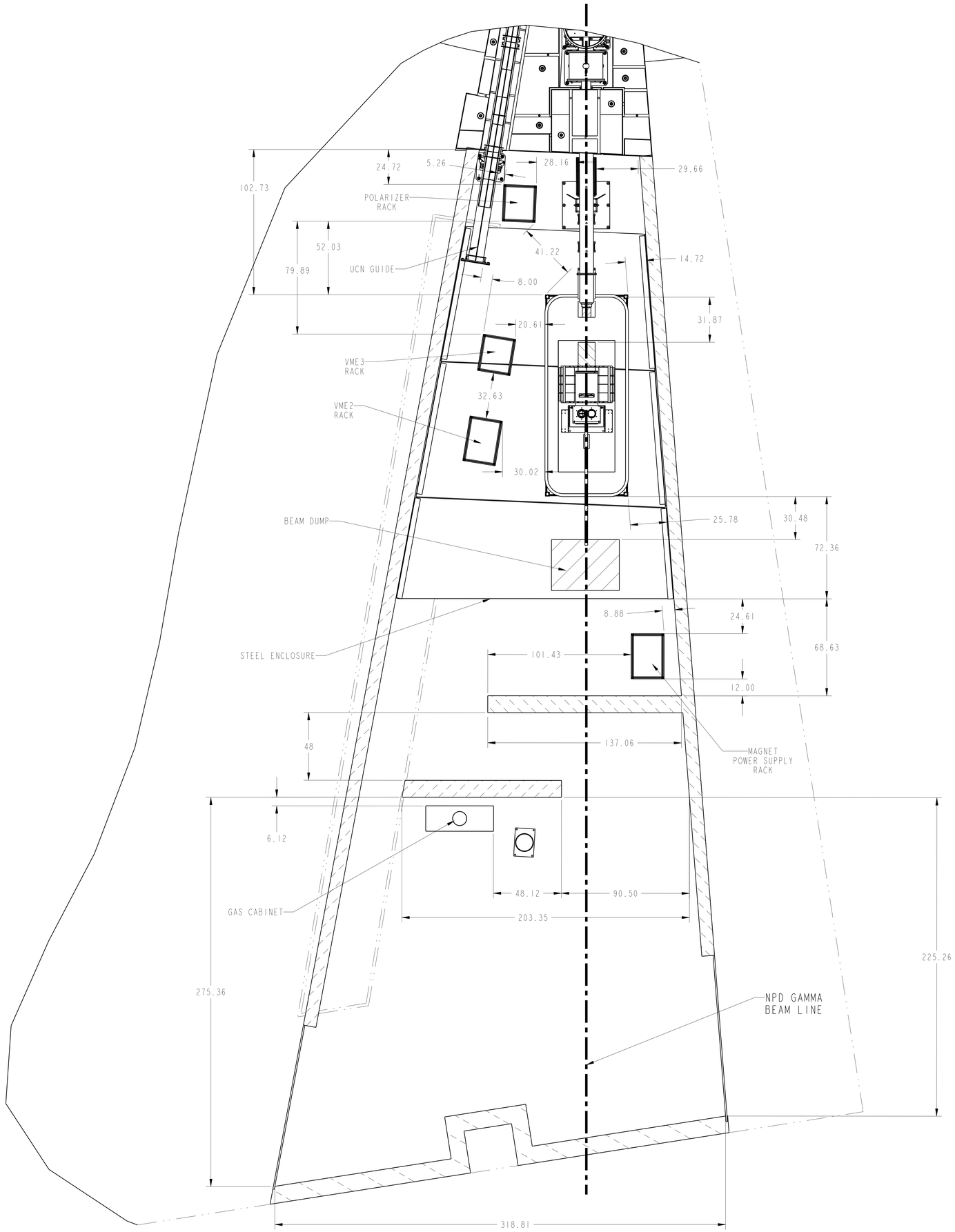

PLAN VIEW

NPD GAMMA
AUXILLARY EQUIPMENT LAYOUT

SIZE	DRAWING NUMBER	REV
E	NPD GAMMA SHIELDING	-
SCALE: 1/400	CAD MODEL: 1071601O3M8E8700A001-1	SHEET 2 of 3

THIS DRAWING PREPARED ON Pro/ENGINEER

DWG NO. NPD_GAMMA_SHIELDING Sh 2

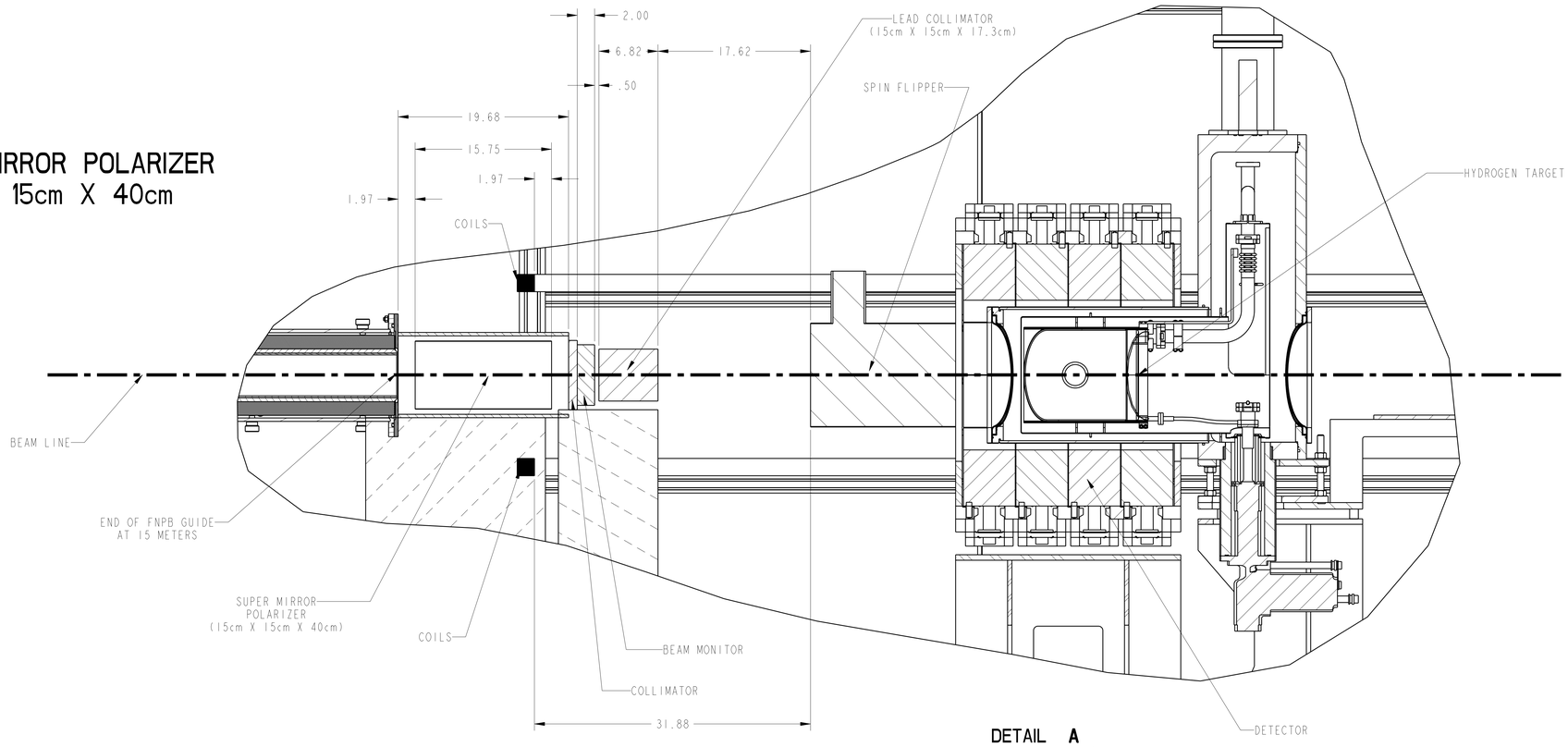

DETAIL A
SUPER MIRROR POLARIZER
SCALE 4/25

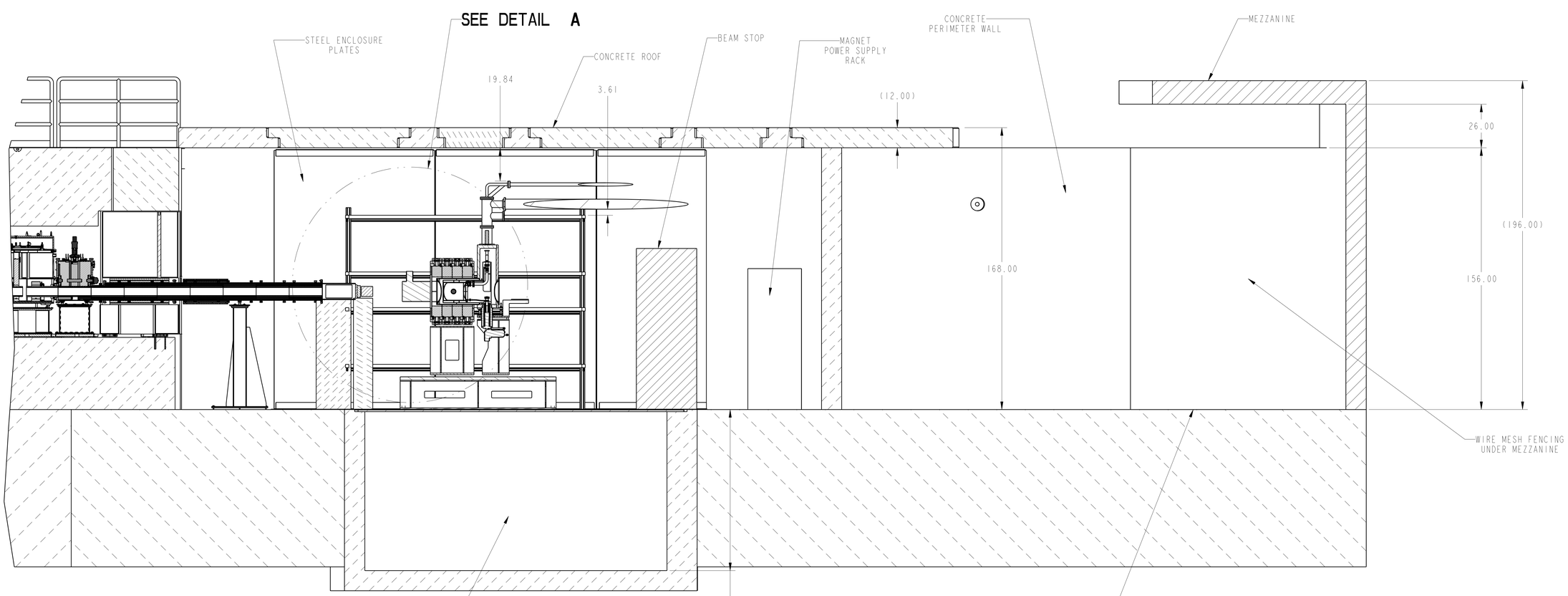

ELEVATION
X-SECTION

SIZE	DRAWING NUMBER	REV
E	NPD GAMMA SHIELDING	-
SCALE 1/400	CAD MODEL 107160103M8E8700A001-1	SHEET 3 of 3

THIS DRAWING PREPARED ON Pro/ENGINEER

DWG NO. NPD_GAMMA_SHIELDING 3