OAK RIDGE NATIONAL LABORATORY

Liquid Hydrogen Pressure Vessel Analysis

Claire R. Luttrell

9/18/2007

1.0 INTRODUCTION

An SNS experiment is being designed that includes a 20 liter liquid hydrogen (LH2) target. The target vessel is classified as a pressure vessel and needs to meet the ASME Boiler and Pressure Vessel Code (B&PV) Section VIII, Division 2 (Ref. 1) requirements. The vessel is being designed for a physics experiment and the neutron beam entry window, or dome, needs to be thin. It was requested that a finite element analysis be performed to determine the maximum allowable working pressure (MAWP) of the vessel. This is being done as a preliminary analysis, before approaching a pressure vessel manufacturer, to determine if the MAWP of the present design is high enough to proceed. The manufacturer will then confirm that the vessel meets the ASME Code requirements and produce a stamped vessel.

2.0 PRESSURE VESSEL MODEL

The LH2 pressure vessel consists of three different parts, each made of 6061-T6 aluminum. The parts include the Exit Dome, the Tube Body and the thin Entrance Dome. These three parts are welded together. The finite element program ANSYS (Ref. 2) was used to analyze the LH2 vessel. The model was imported into ANSYS from drawings furnished by Indiana University Cyclotron Facility (IUCF). The model for the Exit Dome and the Tube Body was imported from the IUCF drawing number 310899-000, "Liquid H2 Vessel Weldment Aluminum Version NPDG". This drawing included a thicker Entrance Dome, which was deleted and replaced by the thin Entrance Dome from IUCF drawing number 310904-000, "Dome Entrance Thin NPDG LH2 Vessel". The weld region was modeled as a continuous wall section. Figure 1 shows the model used for the finite element analysis.

Due to symmetry it was necessary to model only one-half of the pressure vessel. The model was meshed with 29,700 3-D 20 node structural solid elements. The model included 106,435 nodes. The Entrance Dome and Tube Body were modeled with hexahedron elements, but because of the irregular shape of the exit dome it was modeled with tetrahedron elements.

3.0 ASSUMPTIONS

1. An internal pressure of 100 psi was applied to the model.
2. Symmetric boundary conditions were applied where the model was cut.
3. Fixed boundary conditions were applied at the end of both nozzles.
4. The material is forged 6061-T6 aluminum.

4.0 JUSTIFICATION OF ASSUMPTIONS

1. Since the analysis is an elastic analysis, the stresses in the model change linearly with the pressure. A stress at any pressure can be determined by the factor between the desired pressure and 100 psi.
2. The model is symmetric around the X-Y plane shown in figure 1.

3. The vessel is cantilevered from the nozzles.
4. The drawings specify 6061-T6 aluminum.

5.0 MATERIAL PROPERTIES AND ALLOWABLES

The material properties used in the finite element calculation for 6061-T6 aluminum were taken from the ASME Boiler and Pressure Vessel Code Section II, Part D (Ref 3).

Modulus of elasticity	$E = 10.0 \times 10^6$ psi
Poisson's ratio	$\nu = 0.33$
Density	$\rho = 0.098$ lb/in^3

The yield stress and the allowable stress intensity values for 6061-T6 aluminum are specified in the Cases of ASME B&PV Code. The code case that gives the information on forged 6061-T6 aluminum is Code Case 2478 (Ref. 4).

Yield stress	$S_y = 35{,}000$ psi
Allowable Stress Intensity	$S_m = 12{,}700$ psi
Weld Allowable Stress Intensity	$S_m = 8{,}000$ psi

Section VIII, Division 2, Appendix 4 – Design Based on Stress Analysis of the ASME B&PV Code has specific rules for the combination of general, localized and bending stresses determined from the finite element analyses. The rules of combination are:

$\mathbf{P_m < S_m}$ = 12.7 ksi, where P_m is the general primary membrane stress intensity
$\mathbf{P_m < S_m}$ = 8.0 ksi, in the weld region
$\mathbf{P_L < 1.5S_m}$ = 19.0 ksi, where P_L is the local primary membrane stress intensity
$\mathbf{P_L < 1.5S_m}$ = 12.0 ksi, in the weld region
$\mathbf{P_L + P_b < 1.5S_m}$ = 19.0 ksi, where P_b is the primary bending stress intensity
$\mathbf{P_L + P_b < 1.5S_m}$ = 12.0 ksi, in the weld region
$\mathbf{Q < 3S_m}$ = 38.1 ksi, where Q is the secondary stress intensity

The ASME Code limits are based on Maximum Shear Stress theory. Stress intensity is two times the maximum shear stress. Stress intensity values are determined from the finite element analysis and compared to the ASME limits. The primary membrane stresses, P_m and P_L, are average stress values through the wall thickness. The combined primary membrane and bending stress are the highest stress value through the wall.

6.0 COMPUTATIONS AND ANALYSIS

A static structural finite element analysis was done on the LH2 pressure vessel to determine the maximum allowable internal pressure. The finite element program ANSYS was used for the computations. The results of the analysis show that the maximum stress is located in the thin dome as shown in Fig. 2. The maximum stress intensity with an internal pressure of 100 psi is 12,963 psi. The average stress intensity

through the wall at this location is 9,254 psi. These values can be compared to the ASME limits as shown in Table 1. These stresses are located away from the weld so can be compared to the higher ASME limits discussed in Section 5.0.

Since the ASME limits are reduced within one inch of a weld to a lower value, it is necessary to examine the areas around the welds. The maximum stress intensity in the weld region is 4,728 psi, located about 1" away from the weld connecting the Tube Body to the Entrance Dome. The stresses immediately around the weld are lower than this. The average stress though the wall at this location is 4,527 psi.

By comparing the results to the ASME limits for 6061-T6, a factor can be determined. The minimum factor can be multiplied by the 100 psi pressure to determine the maximum allowable pressure. Table 1 shows the results in various parts of the pressure vessel compared to the ASME limits. The minimum factor is found by comparing the maximum stress intensity in the thin dome to the ASME limit for general primary membrane stress. This comparison gives a factor of 1.37. Based on this analysis the maximum internal pressure the ASME Code would permit for the LH2 pressure vessel is 137 psi.

Table 1 – Comparison of Finite Element Results to ASME limits

Location	Type of Stress	Max Stress	ASME Limit	Factor
Thin Dome	P_m	9,254	12,700	1.37
Thin Dome	$P_m + P_b$	12,963	19,000	1.46
Exit Dome	P_m	4,491	12,700	2.83
Exit Dome - Nozzle	P_L	8,132	19,000	2.34
Exit Dome - Nozzle	$P_L + P_b$	10,409	19,000	1.82
Tube Body	P_m	4,423	12,700	2.87
Tube Body	$P_m + P_b$	4,433	19,000	4.28
Within 1" of Weld – Exit	P_m	4,241	8,000	1.89
Within 1" of Weld – Exit	$P_m + P_b$	4,527	12,000	2.65
Within 1" of Weld – Entrance	P_m	4,527	8,000	1.77
Within 1" of Weld – Entrance	$P_m + P_b$	4,728	12,000	2.54

P_m – General Primary Membrane Stress
P_L – Local Primary Membrane Stress
P_b – Primary Bending Stress

7.0 CONCLUSION

The results of the finite element analysis of the liquid hydrogen pressure vessel were used to determine the maximum internal pressure the vessel can withstand and still meet the ASME B&PV Code Section VIII, Division 2 requirements. Since the 6061-T6 aluminum vessel includes a weld, it was necessary to use the allowable values shown in Code Case

2478. By examining the results and looking at the maximum stresses in the different parts of the vessel, including the weld regions, a maximum internal pressure was determined. The actual analysis was run with an internal pressure of 100 psi, but since the calculation is elastic, the stress will change linearly with the pressure. It was determined that the vessel could withstand a maximum pressure 1.37 times the applied pressure, therefore the vessel can withstand an internal pressure of 137 psi and meet the ASME requirements.

8.0 FIGURES

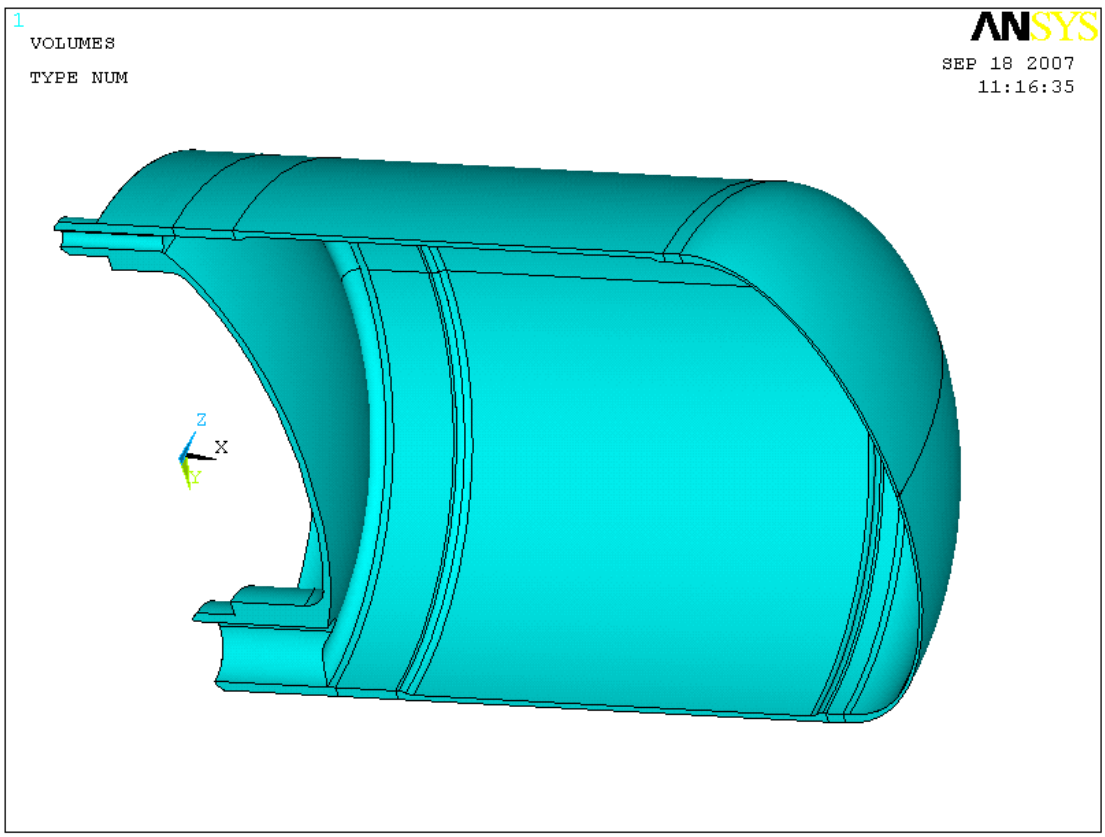

Figure 1 – Model of Liquid Hydrogen Pressure Vessel

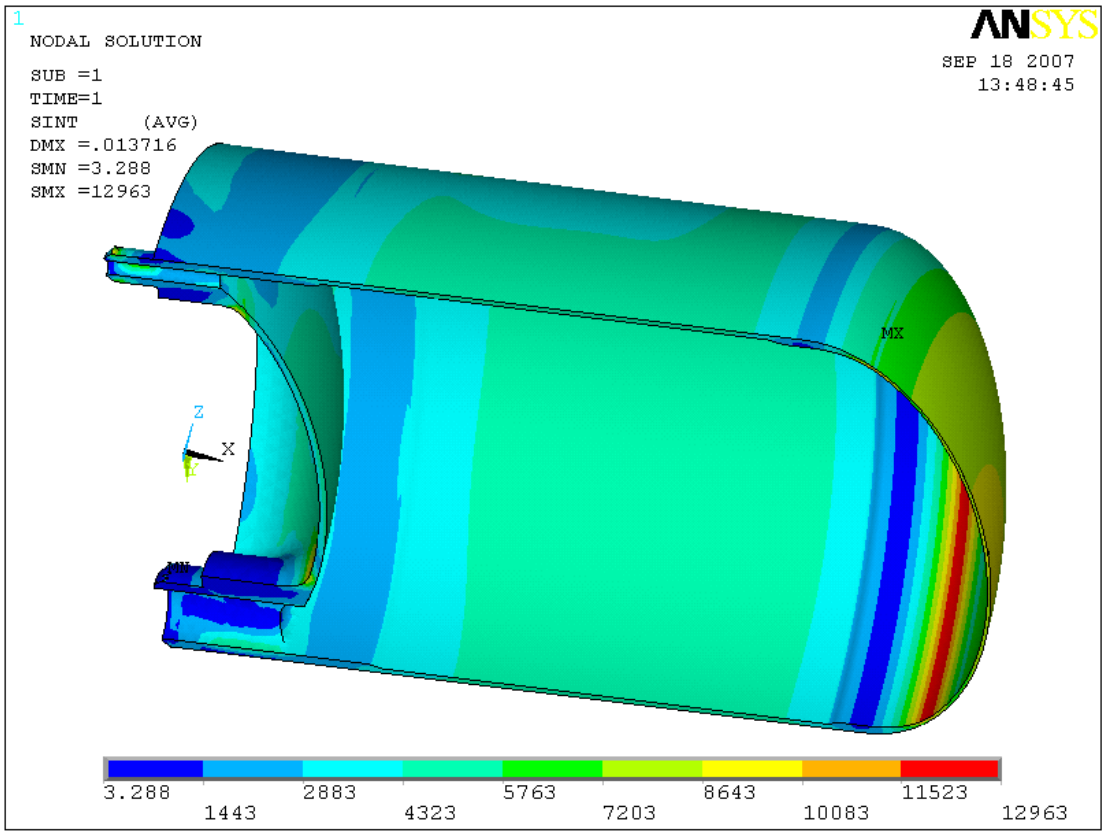

Figure 2 - Stress Intensity (psi) due to 100 psi Internal Pressure

9.0 REFERENCES

1. *ASME Boiler and Pressure Vessel Code, Section VIII, Division 2,* American Society of Mechanical Engineers, New York, New York, July 1, 2005.

2. *ANSYS,* Version 11.0, ANSYS, Inc., Canonsburg, PA, 2007.

3. *ASME Boiler and Pressure Vessel Code, Section II, Part D,* American Society of Mechanical Engineers, New York, New York, July 1, 2005.

4. *ASME Boiler and Pressure Vessel Code, Code Cases,* American Society of Mechanical Engineers, New York, New York, July 1, 2005.