Draft of

Design Criteria for the Gas Handling System of the NPDGamma Liquid Hydrogen Target in Beam Line 13 at SNS

Location: SNS, Target building #2086, beam line 13
Organization: Physics Division
Date: August 23, 2007
By NPDGamma Project Manager:
seppo penttila
574-4737
penttilasi@ornl.gov

Purpose of document
This document lists design criteria for the hydrogen gas handling system of the NPDGamma liquid hydrogen
n target in beam line 13 at SNS.

System Description
The NPDGamma Collaboration has built a 16-liter Liquid Hydrogen (LH2) Target for the $n+p \rightarrow d+\gamma$ experiment that will be the first experiment in beam line 13 at SNS. The experiment plans to run in 2008. ATTACHMENT A shows the target system diagram as it was for the experiment that was run at LANSCE in 2006. A detail description of the LH2 target system and its safety is given by the NPDGamma Liquid Hydrogen Target Engineering Document [1].

One of the components of the target system is the hydrogen gas handling system (GHS) which is needed for delivery of hydrogen gas from the supply manifold [2] containing of three pressurized storage cylinders, to the cryostat while conditioning the gas and regulating and metering its flow rate. GHS is described in the Engineering Document [1]. The gas handling system can be seen in the NPDGamma LH2 target diagram shown in ATTACHMENT A, the GHS part is separated from the rest of the target system by a dashed line box called "gas panel hut". ATTACMENT B shows a proposed location of the GHS enclosure in beam line 13. ATTACHMENT C shows the gas handling enclosure in 1FP12 at LANSCE during the 2006 run. The GHS is enclosed to a steel enclosure with a 8" diameter ventilation pipe attached that in a case of a hydrogen leak will safely conduct the hydrogen gas outside of the Target building. The GHS enclosure and the hydrogen supply cabinet have a common ventilation line.

The design of the gas handling system and the enclosure should meet requirements given by
- *NFPA-50, Standard for Gaseous hydrogen Systems at Consumer Sites*
- *NFPA-70, The National Electrical Code*
- *NFPA-497, Classification of Flammable Liquids, Gases or Vapors and Hazardous Locations*

- DOE 420.1A, Facility Safety, Section 4.2 "Fire protection"
- LIR 402-910-01, LANL Fire Protection Program, Section 6.1

It is not possible to meet all the requirements given by these and other documents. Where we cannot meet the requirements, we have done our best to mitigate the consequences. For example, the particular requirement of concern is that the GHS does not in its location have the required 15' setback from conventional electrical equipment. By enclosing the GHS and venting the enclosure, a boundary is established isolating the GHS from the ignition hazards associated with electrical equipment.
This also addresses the requirements of NFPA-50A, *Standard for Gaseous Hydrogen Systems at Consumer Site*s although again strict compliance is not achieved due to operational requirements and space constraints. Our system falls within the category of 400 to 3500~SCF of hydrogen within the code. The GHS should meet the following of those requirements:
- Electrical equipment, pressure sensors and hydrogen safe mechanical pump, within the cabinet will meet the requirements for Class 1.

In addition, we have instituted a number of administrative and engineering controls that should bring us to equivalent compliance;

- GHS can only be operated by trained and authorized personnel – formal training and qualification of operations staff are defined and authorized by the line management.
- We have approved operating procedures, see User's Guide [2].
- We have extensive procedures for leak testing of the GHS, see Target User's Guide [2]. The procedures have to be approved.
- We have a continuous monitoring of hydrogen levels in the enclosure.
- We have controls that automatically stop hydrogen flow in the GHS and dump the contents of the system upon detection of hydrogen in the enclosure [3].
- We have an automatic shut down of electrical power in the enclosure in the event of detection of hydrogen in the enclosure.
- We are using welded joints as many places as possible but if other type of joints are needed, we use either VCR or CF type joints.
- All the components of the GHS will be thoroughly pressure tested to 1.2x MAWP set by the relief valves RV102 and RV103.
- The GHS is protected for over pressures by pressure relief valves RV102 and RV103.
- The layout of the GHS panel has to be clear and components and their functions easily identified.
- The hydrogen gas flow rate in the GHS is limited to less than 20 slpm.

<u>Hazard Description, Consequences, and their Mitigations</u>

1. Hazard:	*Hydrogen burning inside the supply system piping*
Consequences:	Pressure build-up and rupture of a component of the piping and a possible hydrogen gas leak to Target Building and combustion.

Mitigation:
The GHS is designed to handle safely any emergency situations. The piping and components are designed and built to take high pressures. MAWP of the piping is more than 250 psid. The MAWP is 100 psid set by relief valves RV102 and RV103. Welded joints are preferred, most of the joints are welded but if required VCR joints are used. Components and piping is thoroughly leak checked and pressure tested. Hydrogen gas flow rate is limited to less than 20 slpm by fixed flow restrictors in the supply system. The GHS ventilation pipe has to handle the 20 slpm H2 flow rate. The GHS can only be operated by trained and authorized personnel. Training and qualifications of operations staff are approved and authorized by the line management. We will have extensive operating procedures for the use of the GHS and for leak testing of the system. We will have controls that automatically stops the hydrogen flow from the supply manifold in an event of detection of hydrogen in the GHS enclosure, in the target main vacuum, in experiment enclosure, or pressure in the target vessel passes the set point during target filling process, or in the event of any hydrogen warning or alarm, such as loss of electrical power, loss of main vacuum, or loss of hydrogen flow.

2. Hazard: *Hydrogen leaking out from the hydrogen piping into the enclosure.*
Consequences: Possible hydrogen burning
Mitigation:
The GHS enclosure is equipped with two hydrogen level sensors. If the hydrogen is detected in the supply cabinet, the hydrogen source will be closed by shutting off valve PV100. The leaked gas in the enclosure flows outside the Target Building through the ventilation pipe. The piping and components of the GHS can tolerate high pressures. MAWP of the piping is more than 250 psid. The MAWP of the supply system is 100 psid set by relief valves RV102 and RV103. We will use only welded joints but if required VCR joints can be used. Components and piping are thoroughly leak checked and pressure tested. Hydrogen gas flow rate is limited to less than 20 slpm by fixed flow restrictors before the regulators. The system can only be operated by trained and authorized personnel. Training and qualifications of operations staff are approved and authorized by the line management. We will have extensive approved operating procedures. We will have extensive approved procedures for leak testing of the system. We will have controls that automatically stops the hydrogen flow from the supply gas manifold in the event of detection of hydrogen in the supply cabinet, GHS enclosure, in the main vacuum of the target, in experiment enclosure, or pressure in the target vessel passes the set point, or in the event of any hydrogen warning or alarm, such as loss of electrical power, loss of main vacuum, or loss of hydrogen flow in target GHS.

3. Hazard: *Air leak into the hydrogen supply system.*
Consequences: Possible hydrogen fire inside the piping.
Mitigation:
See hazard above " *Hydrogen burning inside the supply system piping*". When the GHS is not used the lines are filled with helium. Prior a start of target filling a careful leak check of the system is performed using the specific procedure.

4. Hazard: *Physical damage of the hydrogen supply system by a crane operation.*

Consequences: Rupture of the piping and hydrogen fire

Mitigation:

Interaction of the ventilation pipe and crane load should not damage the GHS enclosure and the gas manifold inside the cabinet, the cabinet is mechanically strong. During the hydrogen condensation, crane operation in the end of the FNPB could be excluded if necessary – no crane movements on the top of the FNPB back part where the GHS enclosure is located.

Design Requirements

- Hydrogen flow in the lines restricted less than 20 slpm.
- The GHS protected by pressure relief valves with properly set relief points.
- Leak rate: Helium leak rate less than $1x10^{-9}$ atm cm^3/s.
- Layout of the GHS and components have to be clear, the main hydrogen line has to be separated from the rest of the GHS so that it is easy to identify.
- Valves used in the hydrogen line and connecting lines have to be easily recognizable. It has to be visually easy to see if a valve is open or closed - on/off type valves with lever-type handles.
- Inside the enclosure hydrogen safe pressure sensors and vacuum pump are used Careful electrical grounding of the components and the enclosure.

References

[1] NPDGamma Liquid Hydrogen Target Engineering Document, V2.0.
Available at web site www.iucf.indiana.edu/U/lh2target/export-files/

[2] Target User's Guide

[3] Design Criteria for the Hydrogen Supply System of the NPDGamma Liquid Hydrogen Target in Beam Line 13 at SNS.

ATTACEMENT A
Diagram of the NPDGamma LH2 target system.

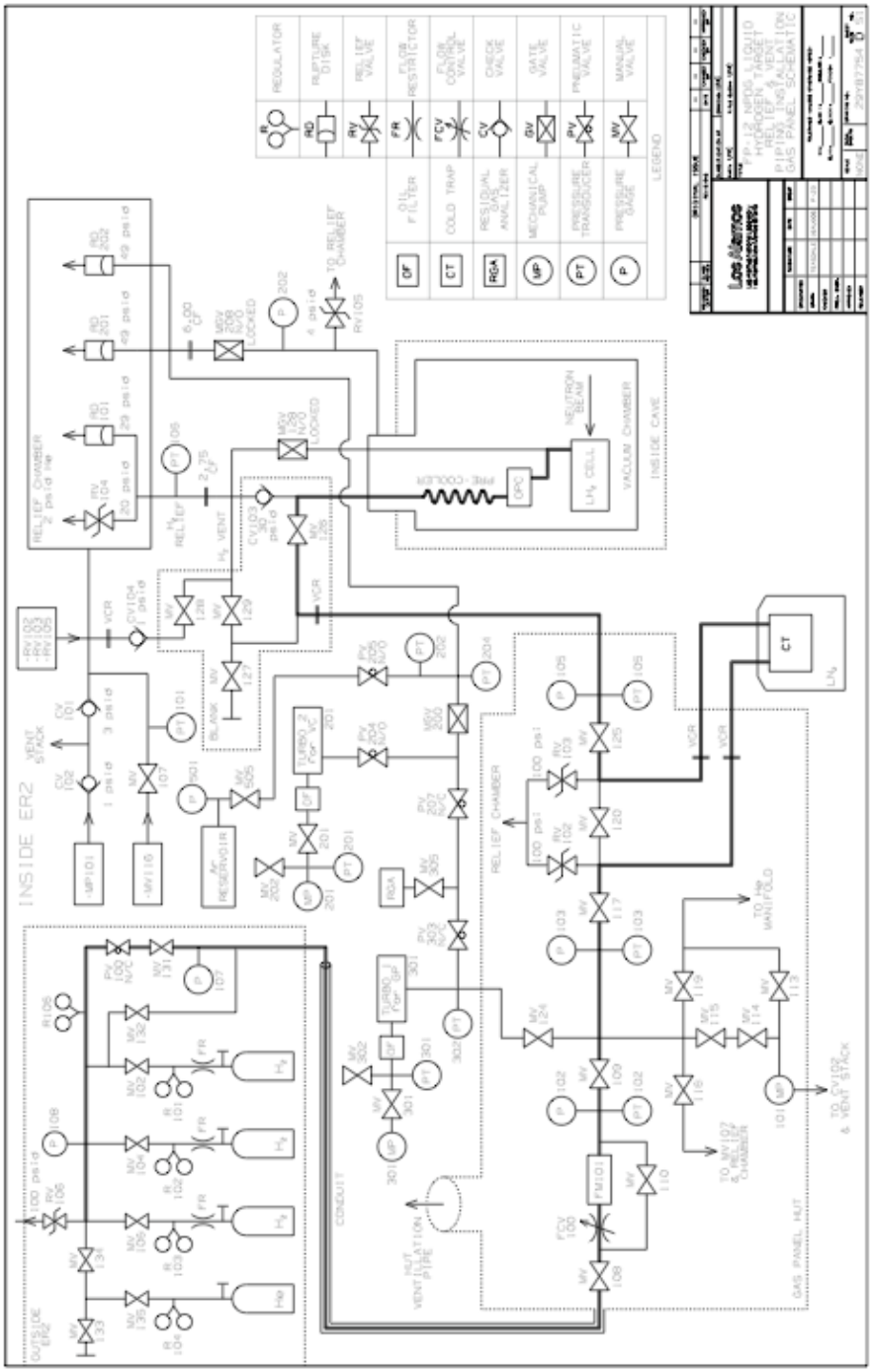

ATTACHMENT B
The hydrogen gas handling enclosure in beam line 13.

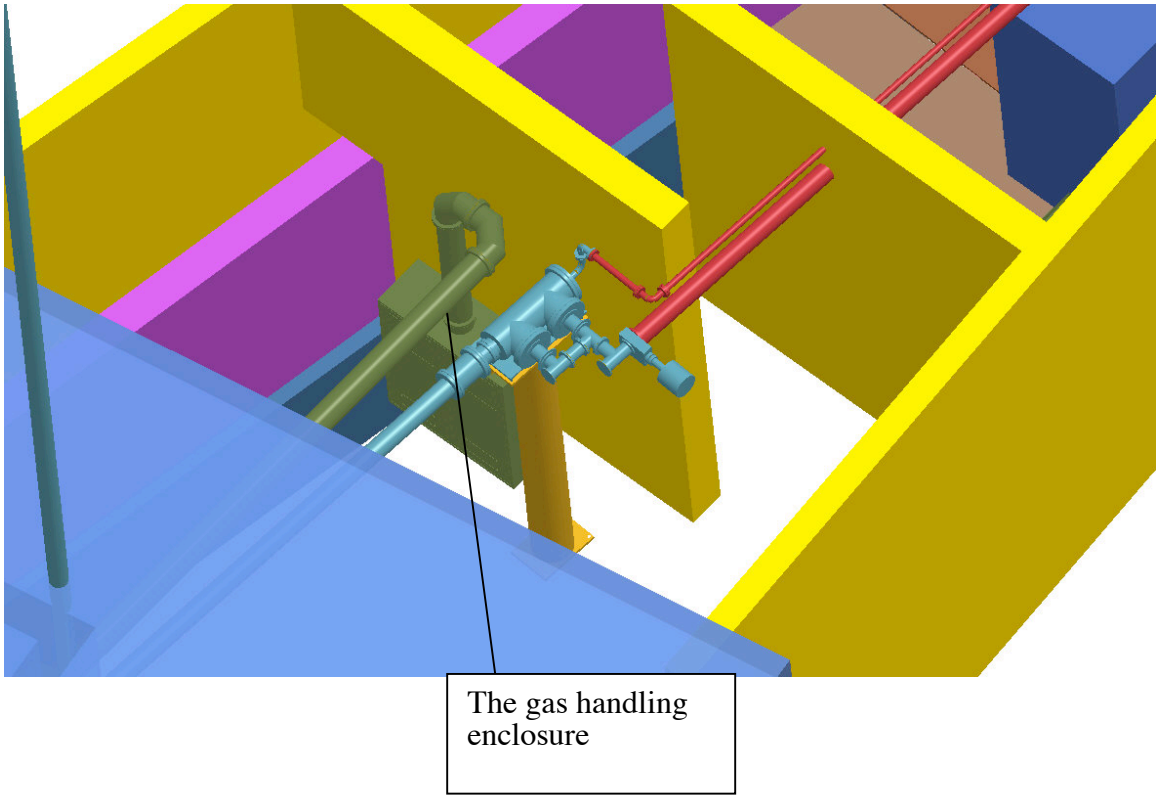

ATTACHMENT C
The gas handling enclosure in 1FP12 at LANSCE