Draft of

Design Criteria for the Hydrogen Supply System of the NPDGamma Liquid Hydrogen Target in Beam Line 13 at SNS

Location: SNS, Target building #2086, beam line 13
Organization: Physics Division
Date: August 23, 2007
By NPDGamma Project Manager:
seppo penttila
574-4737
penttilasi@ornl.gov

Purpose of document

This document lists design criteria for the hydrogen gas supply system of the NPDGamma liquid hydrogen target in beam line 13 at SNS.

System Description

The NPDGamma Collaboration has built a 16-liter Liquid Hydrogen (LH2) Target for the $n+p \rightarrow d+\gamma$ experiment that will be the first experiment in beam line 13 at SNS. The experiment plans to run in 2008. ATTACHMENT A shows the target system diagram as it was for the experiment that was run at LANSCE in 2006. A detail description of the LH2 target system and its safety is given by the NPDGamma Liquid Hydrogen Target Engineering Document [1].

The NPDGamma experiment requires a 16-liter liquid hydrogen (LH2) target. For 16 liters of liquid hydrogen about 14000 liters of hydrogen gas at STP has to be condensed. The hydrogen gas will be supplied by three pressurized gas cylinders, 177 cft at 1900 psi per cylinder which is 6600 liters per cylinder at STP, through regulators and gas handling panel. A goal is to condensate hydrogen gas with the rate of up to 15 slpm which is limited by the cooling power of the two cryocoolers and flow rate of the cold helium gas used to precool the room temperature hydrogen gas. The condensation of the 16 liters would effectively take about two days.
A proposal is to locate a ventilated hydrogen supply cabinet to the end of beam line 13 as indicated in ATTACHMENT B (or if required the supply cabinet can be located outside the Instrument building next to the auxiliary building of the beam line 13. The cabinet would hold three hydrogen cylinders, one helium cylinder, and gas manifold. If the supply cabinet is inside, then next to the cabinet would be the gas handling cabinet [3], see “gas panel hut” in ATTACHMENT A, these two cabinets have a common ventilation pipe ending outside the Target building using same path as the target vent stack. From a cylinder of the supply cabinet the hydrogen gas is conducted into the gas panel and then to the cryostat as can be seen from the flow diagram of ATTACHMENT A. The cabinet ventilation pipe is 8” in diameter and length of 60 ft. Possible hydrogen gas in the supply cabinet or in the gas panel cabinet flows out from the cabinet driven by the “stack-effect”, see ATTACHMANT C.

The hydrogen gas supply system should meet the following requirements given by
- *NFPA-50, Standard for Gaseous Hydrogen Systems at Consumer Sites*
- *NFPA-70, The National Electrical Code*
- *NFPA-497 Classification of Flammable Liquids, Gases or Vapors and Hazardous Locations*
- *DOE 420.1A, Facility Safety, Section 4.2 "Fire Protection"*
- *LIR 402-910-01, LANL Fire Protection Program, Section 6.1*

During a normal target operation the hydrogen supply is valved off by MV131 and MV132 and cylinders are closed and lines filled with He gas. During hydrogen target filling one of the hydrogen cylinders is open per time and hydrogen gas flow rate to the cryostat is regulated by flow control valve FCV100. The maximum flow rate is limited to less than 20 slpm by a restrictive orifice (FR) between the cylinder and regulator. Hydrogen content in the cabinet is monitored and hydrogen levels interlocked. Set points are so that there will be a warning at xx% and yy% LEL (LEL being defined as 4% hydrogen in air by volume). At zz% LEL the supply line valve PV100 is closed.

The hydrogen supply should be in compliance with
- NFPA-70, *The National Electrical Code*
- NFPA-497 *Classification of Flammable Liquids, Gases or Vapors and of Hazardous Locations.*

The particular requirement of concern is that the supply system does not in its location have the required 15' setback from conventional electrical equipment. By enclosing the cylinders and the gas manifold to a ventilated enclosure, a boundary is established isolating it from the ignition hazards associated with the electrical equipment. This also addresses the requirements of NFPA 50A, *Standard for Gaseous Hydrogen Systems at Consumer Sites* although strict compliance is not achieved due to operational requirements and space constraints. The supply system falls within the category of 400 to 3500 SCF of hydrogen within the code
The enclosure installation should meet the following of those requirements;
- The cabinet is fabricated from SST, non-combustible material
- Ventilation is provided as required.

Since we cannot be in full compliance with all the code requirements we have instituted a number of administrative and engineering controls that should bring us to achieve equivalent compliance;
- hydrogen supply system can only be operated by trained personnel - formal training and qualification of operations staff are authorized by line management
- extensive operating procedures
- extensive procedures for leak testing of the system
- continuous monitoring of hydrogen levels in cabinet
- welded joints or VCR joints
- control that automatically stop the flow upon detection of hydrogen leaks in the cabinet.

- gas cylinder regulators are equipped with fixed 20 slpm flow restrictors to mitigate consequences of regulator failure
- all the components will be thoroughly pressure tested to 1.2 times to the MAWP of the hydrogen supply system

Hazard Description, Consequences, and their Mitigations

1. Hazard: *Hydrogen burning inside the supply system piping*
Consequences: Pressure build-up and rupture of a component of the piping and a possible hydrogen gas leak to Target Building and combustion.
Mitigation:
The supply system is designed to handle safely any emergency situations. The piping and components of the supply system are built to take high pressures. MAWP of the piping is more than 250 psid. The MAWP of the supply system is 100 psid set by relief valve RV106. Welded joints are preferred but if required VCR joints are used. Components and piping is thoroughly leak checked and pressure tested. During hydrogen condensation process only one cylinder is open per time to the gas manifold. Hydrogen gas flow rate is limited to less than 20 slpm by fixed flow restrictors before the regulators R101, R102, and R103. The cabinet ventilation pipe has to handle the 20 slpm H2 flow rate. The gas system can only be operated by trained and authorized personnel. Training and qualifications of operations staff are approved and authorized by the line management. We will have extensive operating procedures for the use of the hydrogen supply system and for leak testing of the system. We will have controls that automatically stops the hydrogen flow from the supply manifold to the target in the event of detection of hydrogen in the target GHS enclosure, in the target main vacuum, in experiment enclosure, or pressure in the target vessel passes the set point during target filling process, or in the event of any hydrogen warning or alarm, such as loss of electrical power, loss of main vacuum, or loss of hydrogen flow.

2. Hazard: *Hydrogen leaking out from the hydrogen piping into the cabinet.*
Consequences: Possible hydrogen burning
Mitigation:
The supply cabinet is equipped with two hydrogen level sensors. If the hydrogen is detected in the supply cabinet, the hydrogen source will be closed by shutting off valve PV100. The leaked gas will vent outside the Target Building through the ventilation pipe. The piping and components of the supply system can tolerate high pressures. MAWP of the piping is more than 250 psid. The MAWP of the supply system is 100 psid set by relief valve RV106. We will use only welded joints but if required VCR joints can be used. Components and piping are thoroughly leak checked and pressure tested. Hydrogen gas flow rate is limited to less than 20 slpm by fixed flow restrictors before the regulators. The system can only be operated by trained and authorized personnel. Training and qualifications of operations staff are approved and authorized by the line management. We will have extensive approved operating procedures. We will have extensive approved procedures for leak testing of the system. We will have controls that automatically stops the hydrogen flow from the supply gas manifold in the event of

detection of hydrogen in the supply cabinet, GHS enclosure, in the main vacuum of the target, in experiment enclosure, or pressure in the target vessel passes the set point, or in the event of any hydrogen warning or alarm, such as loss of electrical power, loss of main vacuum, or loss of hydrogen flow in target GHS.
During a condensation process only one cylinder per time is open to the gas panel. A leak in the piping will bleed, in the worst possible situation, a part of the content of one cylinder into the cabinet and then through the ventilation pipe outside the Target building.

3. Hazard: *Air leak into the hydrogen supply system.*
Consequences: Possible hydrogen fire inside the piping.
Mitigation:
See hazard above " *Hydrogen burning inside the supply system piping*". When the supply system is not used the lines are filled with helium. Prior a start of target filling a careful leak check of the system will be performed using the specific procedure.

4. Hazard: *Physical damage of the hydrogen supply system by a crane operation.*
Consequences: Rupture of the piping and hydrogen fire
Mitigation:
Interaction of the ventilation pipe and crane load should not damage the supply cabinet and the gas manifold inside the cabinet, the cabinet is mechanically strong. During the hydrogen condensation, crane operation in the end of the FNPB can be excluded if necessary – no crane movements on the top of the FNPB back part where the supply cabinet will be located.

References

[1] NPDGamma Liquid Hydrogen Target Engineering Document, V2.0.
Available at web site www.iucf.indiana.edu/U/lh2target/export-files/

[2] Target User's Guide

[3] Design Criteria for the Gas Handling System of the NPDGamma Liquid Hydrogen Target in Beam Line 13 at SNS.

ATTACHMENT A

The diagram of the NPDGamma target system.

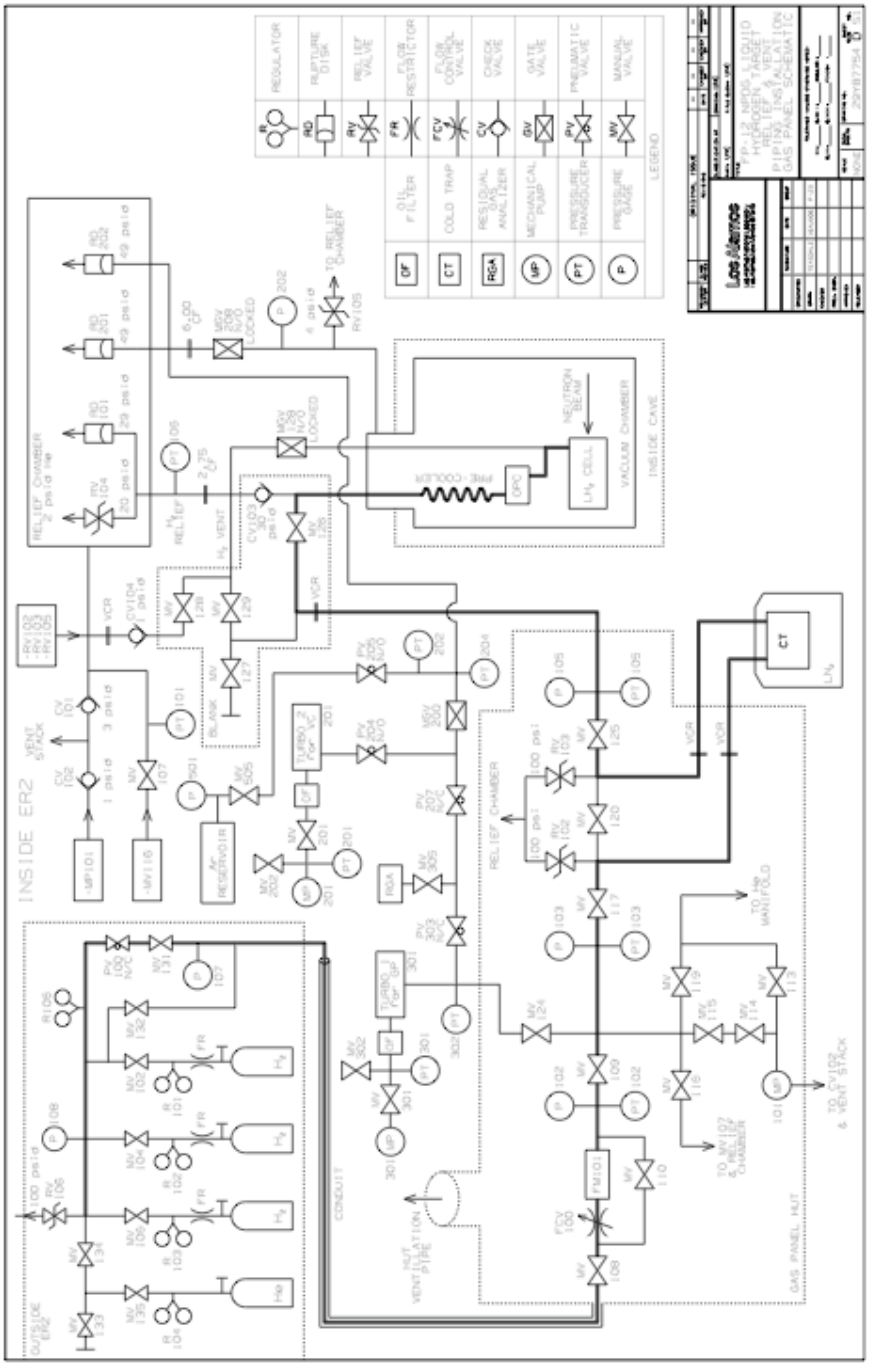

ATTACHMENT B
The LH2 target system in beam line 13.

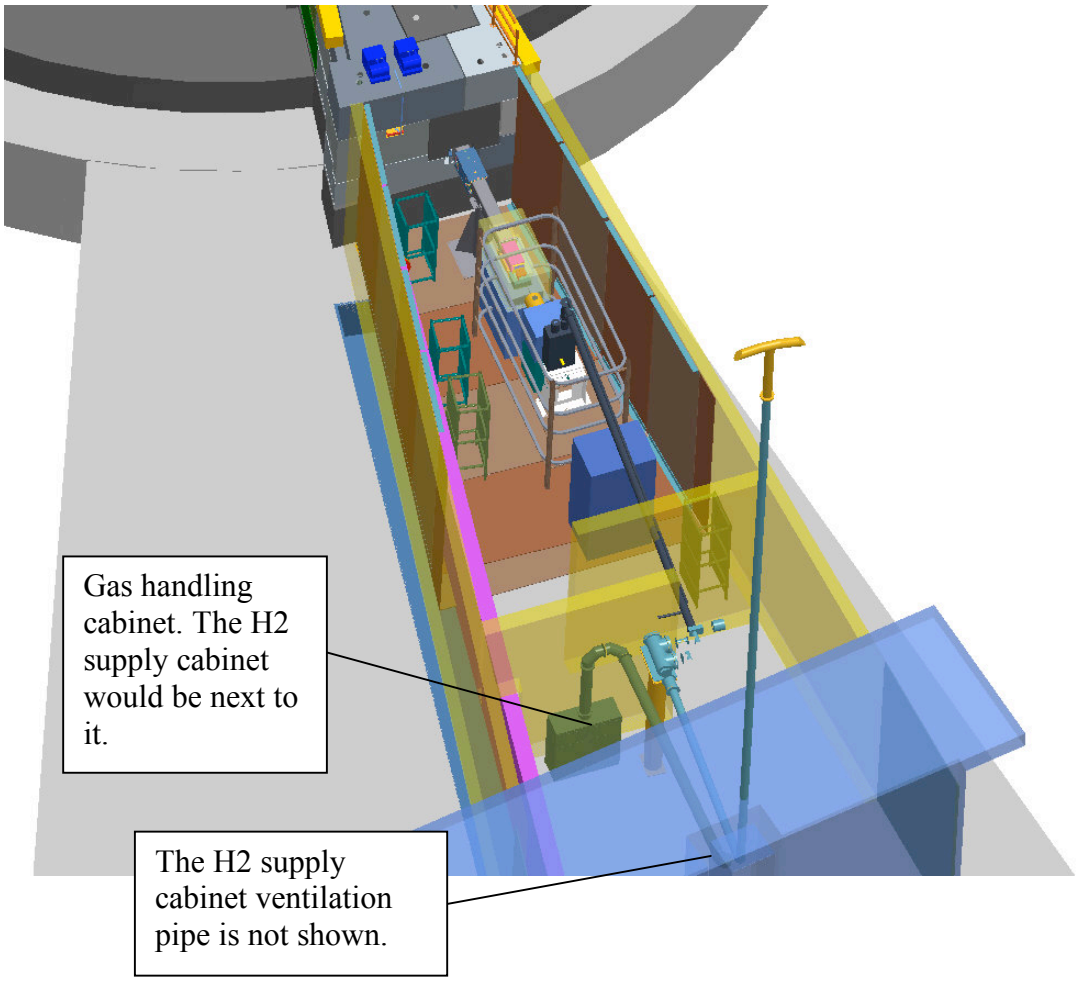

ATTACHMENT C

SIZING OF THE VENTILATION PIPE OF THE HYDROGEN SUPPLY CABINET – STACK-EFFECT

The flow of hydrogen gas from the cylinder is limited by restrictive orifice (FR) to 20 slpm or less. H_2 concentration less than 4% in air does not combust, therefore in calculations 2% hydrogen concentration in air is used. If the hydrogen leak rate to the cabinet is 20 slpm, then airflow rate out from the cabinet along the stack has to be (20 slpm H_2)/0.02 = 1000 slpm (35 cftm) to keep hydrogen concentration below 2%. The ventilation pipe of the cabinet has to be designed for air flows at least 35 cftm.

Assumptions of the sizing of the diameter of the pipe are:

1. Stack-effect is caused by differences in densities of gases, air and 2% hydrogen air mixture, and the height of the stack
2. Complete mixing of air and hydrogen
3. Steady-state condition
4. No wind effect

For estimate of stack-effect we use the following parameter values:

1. Inner diameter of the pipe is 8”
2. Stack height = Z = 40 ft
3. Length of the pipe is = 60 ft
4. Losses caused by joints and other frictions – add 50% to the length. The total equivalent length =100 ft is used.
5. Density of air at sea level ρ=0.0735 lb/cft
6. Hydrogen density at sea level ρ_{H2} = 0.00538 lb/cft

Pressure difference that creates the stack-effect (SE) is

$$\Delta P_{SE} = Z(\rho_{air}-\rho_{2\%H2\ in\ air}) ,$$

where P = pressure (lb/sq ft), Z = stack height (ft), and ρ = density (lb/cft).
For hydrogen diluted air we obtain ρ_{H2}(98% air and 2% hydrogen) = 0.98(0.0735lb/cft)+0.02(0.0054 lb/cft) = 0.0721 lb/cft.

Only 2% H_2 concentrations are considered since the available engineering procedures do no permit modeling of concentrations less than 2% because of the flow resistance in the stack becomes too small.

For the stack-effect we get

$$\Delta P_{SE} = 40\ \text{ft}\ (0.0735-0.0721)\text{lb/cft} = 0.056\ \text{lb/sqft}.$$

If the length of pipe is 100 ft then we have for the driving pressure difference ΔP_{SE}/L= 0.056 lb/sqft /100 ft. The flow driven by the stack-effect experiences a flow friction that we had in the vent stack.

The friction loss of 0.057 lb/sqft/100 ft can be read from Ashrae nomograph for 8" diameter pipe. We obtain an air-flow rate of about 60 cftm=1700 slpm. For 2% H_2-air mixture we can have maximum of 1.2 cftm (34 slpm) hydrogen leak rate. The H_2 flow is limit less than 20 slpm by the orifice.

A hydrogen gas cylinder has 177 cft at 1900 psi, it will take about 3 hours to empty the cylinder through a leak of 1.2 cftm.