D R A F T

MODIFICATIONS AND IMPROVEMENTS TO THE NPDGAMMA LIQUID HYDROGEN TARGET SYSTEM AND SAFETY

June 5, 2008

Revision of this document

Revision	Date	Changes	Comments
1.00	2007-08-22	Draft	
2.00	2008-06-05	Next version of the draft	

1.0 Scope
2.0 Baseline of the target cryostat and the target safety system
3.0 Use of these technical notes
4.0 Modifications and improvements to the LH2 target system
- 4.1 Reduction of the thickness of the entry window of the aluminum LH2 vessel
- 4.2 Thinner cryostat entry windows
- 4.3 Target alignment
- 4.4 Cu radiation shield and its upstream cover lid
- 4.5 Extra bolts for the indium seals in the two cry-cooler flanges
- 4.6 Warped flange of the chimney
- 4.7 Improve thermal conduction between cryo coolers and LH2 vessel
- 4.8 Thermometry and heaters
- 4.9 Lower OPC and its CF flange
- 4.10 External OPC
- 4.11 Removal of non-welded joints in vacuum and hydrogen line to outside of SNS cave boundary

1.0 Scope

The scope of this document is to record plans, changes, and test results to the structure of the cryostat, to its safety, and to its operational baseline established at LANSCE when the NPDGamma Liquid Hydrogen System was approved and successfully operated in 1FP12 in 2006.

2.0 Baseline of the target cryostat and target safety system

The baseline of the target system is defined by the signed as-built drawings, the Target Engineering Document and the approved operating procedures, the approved safety documents, and other documents that describe the target system as operated at LANSCE in 2006.

3.0 Use of these technical notes

Proposed changes to the baseline of the target system should include the following information:

1.0 Definition of the baseline
2.0 Proposed change
3.0 Reason for the change
4.0 How engineering of the change has been performed
5.0 Effect of the change to the target operation and its safety
6.0 How the effect of the change to the safety has been analyzed

4.0 **Modifications and improvements to the LH2 target system**

4.1 Reduction of the thickness of the entry window of the aluminum LH2 vessel

4.1.1 The baseline of the vessel

The analysis of the data collected at LANSCE shows that the total amount of aluminum in beam, the two layers of cryostat windows 2x 0.11” thick and then the LH2 vessel entry window 0.126” thick, is causing a serious background problem for the experiment. In the first upstream ring of the gamma detector the background signal forms about 40-50% of the total signal which has serious effect on the overall uncertainty of the experiment. Some of this background is contributed by the entry window of the LH2 vessel and therefore the thickness of this window has to be reduced. The LH2 vessel operated at LANL had the following pressures and set points.

Table 1. Pressures and set points of the LANL LH2 vessel

Operating pressure	Calculated maximum pressures	Internal MAWP	Relief valve set point	Rupture disk set point
15 psia	Internal 207 psia External 74 psia	60 psid	20 psid	49 psid

4.1.2 Change to the thickness of the entry window of the LH2 vessel

A solution is to reduce the overall aluminum thickness on beam inside the gamma detector. The first step is to reduce the thickness of the beam entry window of the LH2 target vessel from 0.126” to 0.063” in a diameter of 9” as indicated in figure 1. Also the LH2 vessel will be built as an ASME code approved stamped pressure vessel. This proposed change effects the pressures and set points of the relief devices, RV104 and RD101 which will be set accordingly depending of the results of the load analysis performed by an authorized vender.

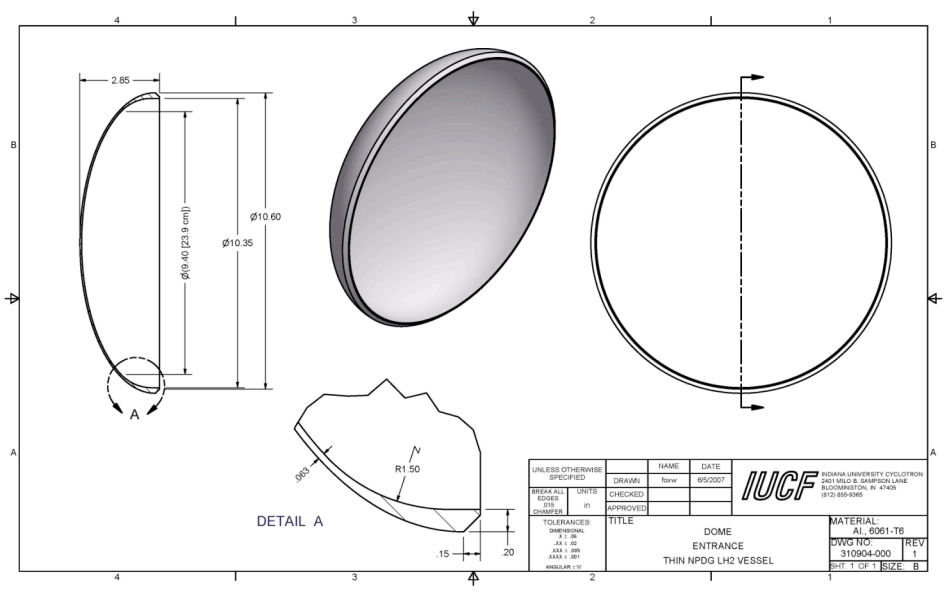

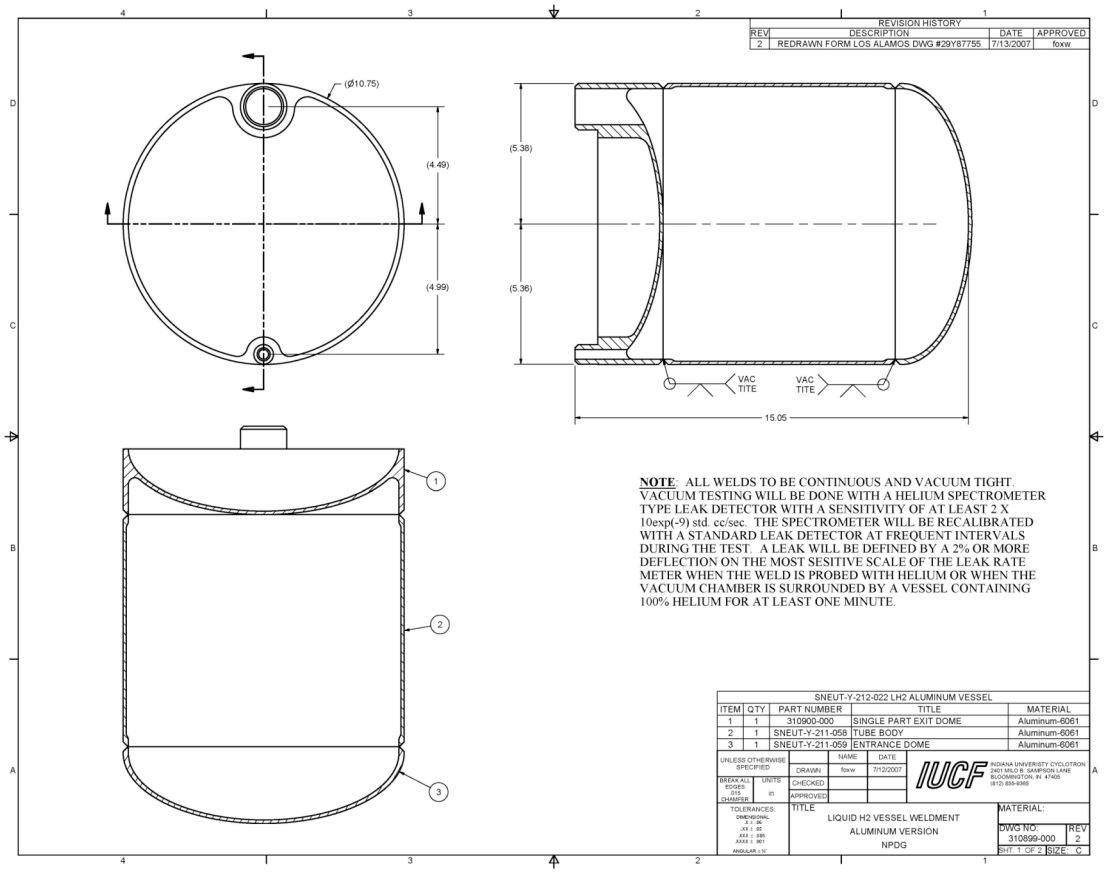

Figure 1. The LH2 target vessel and the proposed thinner beam entry window dome.

4.1.3 Preliminary FEA of the new vessel

Since the new vessel has to meet the ASME pressure vessel code, a finite element analysis (FEA) of the vessel shown in figure 1 was performed at ORNL to see if the new vessel can have a large enough MAWP. The FEA shows that the vessel possesses a maximum internal pressure up to 137 psi. This is more than sufficient for the MAWP set by the relief valve and rupture disk and the design and fabrication of the final vessel can be given to an ASME authorized vendor. Table 2 lists proposed pressures and set points for the new vessel. The final selection will take place as soon as we have analysis results from the vendor.

Table 2. Pressures and set points of the proposed LH2 vessel

Operating pressure	Calculated maximum pressures	Internal MAWP	Relief valve set point	Rupture disk set point
18 psia	Internal 132 psia External 74 psia	20 psid	20 psid	30 psid

4.1.4 Safety analysis

After obtaining MAWP from the safety analysis of the vendor the final set points of the relief valve RV104 and rupture disk RD101 will be selected. The relief pressure has to stay about same as it is now 20-24 psid but the set point of the rupture disk can be brought down closer to the relief set point thus adding extra safety to the system.

4.1.5 Testing and results

Since the vessel will be an ASME-code stamped pressure vessel with MAWP significantly higher than the set point of the rupture disk and the vessel is pressure tested by vendor, there will be no pressure testing by user. Prior operations careful leak checking and check of the relief valve pressures will be performed as a normal operation procedure as described by the Target User's Guide, dated March 20, 2006.

4.2 Thinner cryostat entry windows

4.2.1 Existing windows and safety pressures of the cryostat vacuum chamber

As described above the thick layer of aluminum in neutron beam creates too much background signal in the gamma detector. To reduce the background contribution the thickness of the aluminum in beam is reduced. The target cryostat has two-layer entry window with total thickness of 2x0.11". The pressures and set points of the LANSCE cryostat vacuum chamber are given in table 3.

Table 3. Pressures and set points of the LANSCE cryostat vacuum chamber.

Operating pressure	Calculated maximum pressures	Internal MAWP	Relief valve set point	Rupture disk set point
vacuum	Internal 90 psia External 99 psia	60 psid	small throughput relief valve 3 psid	two parallel rupture disks; 28.8 and 28.8 psid

4.2.2 Proposed modifications

The beam entry vacuum window will be make thinner to thickness of 0.08" in diameter of 8" and the exit windows will be cut to the same thickness in diameter of 2". The helium gas for the entrance window will be maintained by a thin Teflon window. The pressures of the proposed cryostat vacuum chamber are given in table 4.

Table 4. Pressures and set points of the SNS cryostat vacuum chamber.

Operating pressure	Calculated maximum pressures	Internal MAWP	Relief valve set point	Rupture disk set point
vacuum	Internal 32 psia External 134 psia	28 psid	small relief valve 3 psid	two parallel rupture disks; 5 and 5 psid

4.2.3 Effect on target safety

The overall target safety will not change since the set point of the rupture disks will be lowered to 5 psid from 29 psid.

4.2.4 Engineering

According to FEA at IUCF the thinner vacuum windows can withstand 32 psi internal pressure.

4.2.5 Testing
Windows will be tested to pressure of 10 psid

4.3 Target alignment

4.3.1 Alignment problem
During the LANSCE run the LH2 vessel alignment was not enough well known.

4.3.2 Reason for change and proposed change

We need to know the relative locations of the neutron beam and the hydrogen vessel. We propose to improve the precision of the mechanical interfaces between the target vessel, the G-10 spacers, and the radiations shields.

4.3.3 Effect on target operation and safety
No effect

Figure. LH2 vessel spacer made from G-10.

4.4 Cu radiation shield and its upstream cover lid
4.4.1 Existing Cu shield and its upstream cover

The thermal and mechanical contact between the upstream lid on the copper radiation shield and the cylindrical portion of the lid is not sufficient. This can lead to increased heat load on and thermal gradients in the target vessel.

4.4.2 Proposed modifications
The copper radiation shield will be redesigned to improve this contact area and ease of installation. We will add bolts so that the thermal contact of the radiation shield can be improved by mechanical force.

4.4.3 Effect on target operation and safety

Temperature distribution in target is better, less heat flow to the LH2 vessel. No effect on the target safety.

4.5 Extra bolts for the indium seals in the two cry-cooler flanges

4.5.1 Existing geometry and problem

The existing 6 bolts on the flanges for the cryo refrigerators are not enough to supply enough axial force to ensure that the indium o-ring seals reliably.

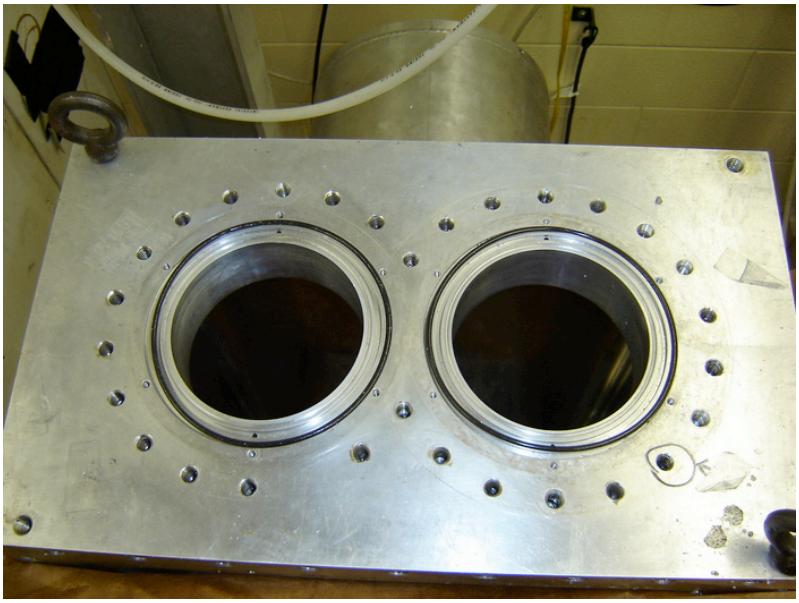

Figure. View of the top of the cryostat with new threaded bolt holes. Viton o-rings and In o-ring groves inside the Viton o-rings are visible. In a new geometry there are 15-16 bolts per flange.

4.5.2 Proposed change

The number of bolts in the flange has been approximately tripled. A stiffening flange for the upper refrigerator has been constructed according to the design below. Nonmagnetic helicoil inserts will be employed to prevent galling of aluminum threads.

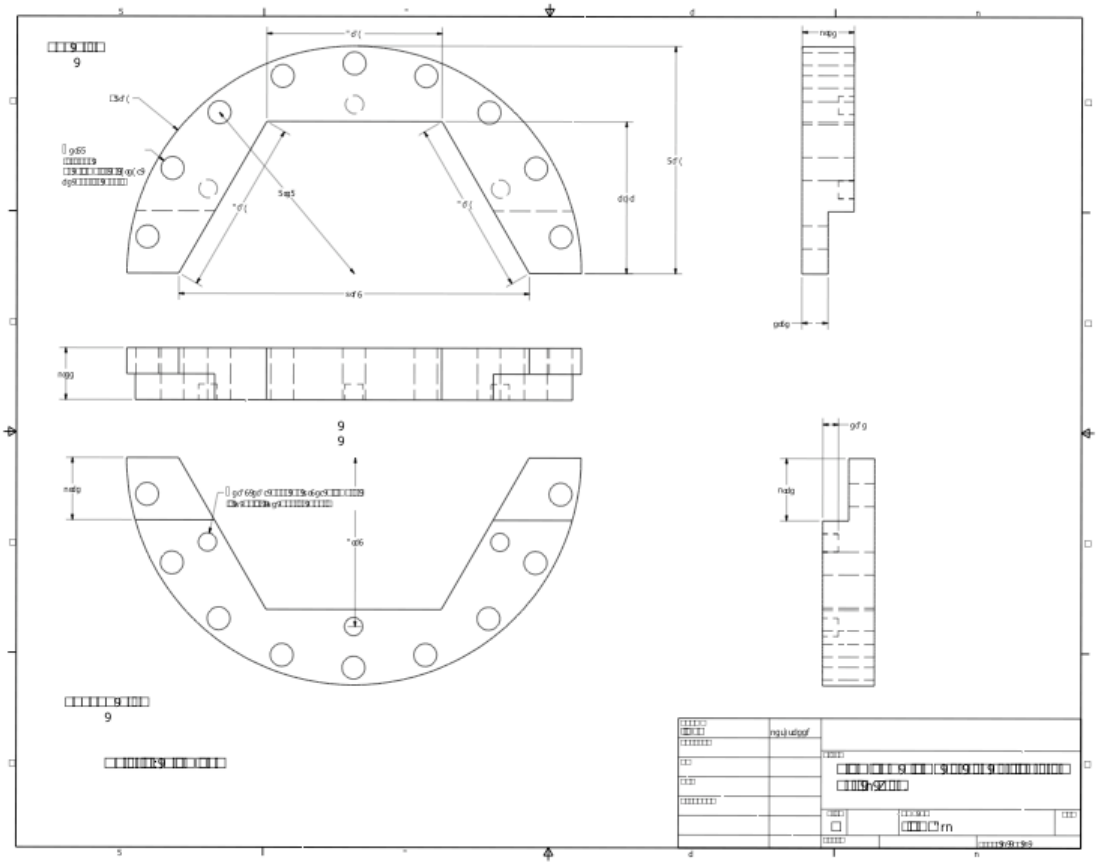

4.5.2 Effect on target operation and safety

Better vacuum sealing. Strengthen axially the joint.

4.6 Warped flange of the chimney

4.6.1 Existing geometry

The flange that mates the hydrogen inlet/outlet to the top of the cryostat vacuum is slightly warped, causing some difficulties in reliable vacuum sealing. Also, the flange is beveled with 6-fold symmetry in such a way that the number of bolts in the flange cannot be increased

4.6.2 Proposed change

The flange has been remade to eliminate the warp and to increase the number of bolts in the flange by about a factor of 3 as shown in the design below. Nonmagnetic helicoil inserts have been installed in the holes to prevent galling of aluminum threads.

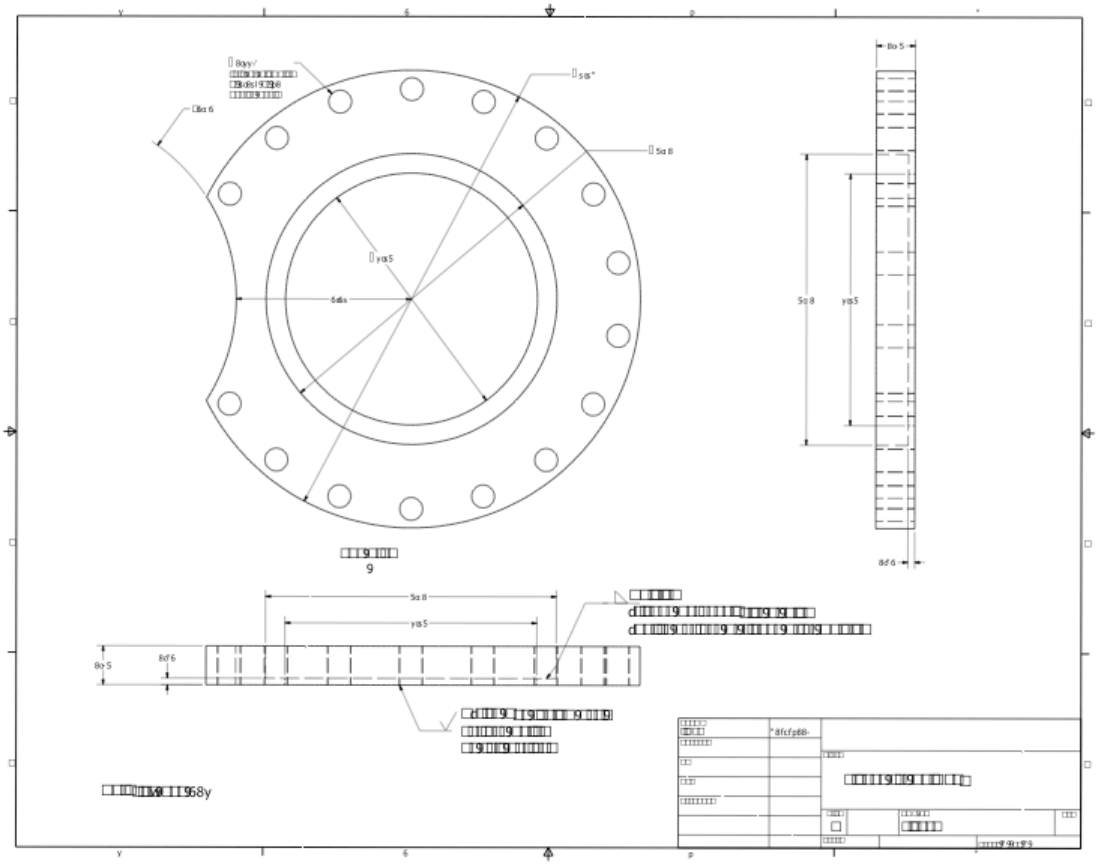

4.6.3 Effect on target operation and safety

The joint will come more reliable and thus decreases probability for leaks.

4.7 <u>Improve thermal conduction between cryo coolers and LH2 vessel</u>

4.7.1 Present arrangement and problem

The thermal contact between the cryo refrigerators and the LH2 target vessel is smaller than desired.

4.7.2 Proposed change

The copper bars and rings used for thermal contact will be redesigned to increase thermal conductance and to increase the surface area of contact between refrigerators and the vessel. Copper will be replaced by aluminum. The cross sectional area of the bars will be increased. The ring clamp used previously will be replaced by a tab on the end of the target vessel with a flat surface that can be bolted directly to the bar. The effectiveness of the aluminum substitution for the copper will be tested at IUCF.

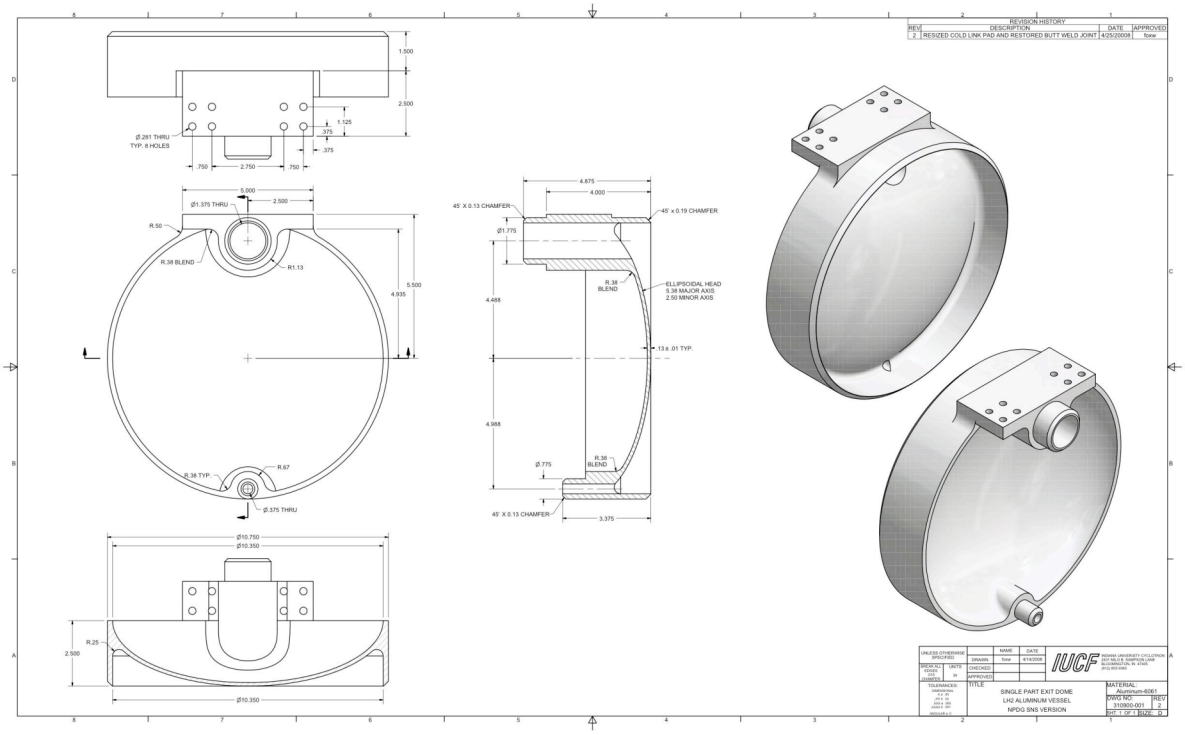

4.7.3 Effect on target operation and safety

Improves the cooling of the target vessel. No effect on safety.

4.8 Thermometry and heaters

4.8.1 Present arrangement and problems

The present thermometry on the target does not give as much information on the status of the system as one would like. There are too few heaters to implement some desired target recirculation modes.

4.8.2 Proposed change

More heaters and thermometers will be added, especially to the upper region of the target and the fill/vent line. The present arrangement of existing heaters and thermometers will be investigated for possible changes. A new electrical feedthrough will be added to the chimney to accommodate the new wires.

4.8.3 Effect on target operation and safety

Improved knowledge of the target state. No effect on safety.

4.9 <u>Lower OPC and its CF flange</u>

4.9.1 Present lower OPC and the problem

There are three problems with the lower OPC; the hard soldered CF flange is not straight, its knife edge is also warned out, and then the Cu mesh on the bottom of the Cu cup is clued to the bottom, epoxy partially covers the flow channel.

4.9.2 Proposed change

Renew the Cu OPC cup with new CF flange. Remount the Cu mesh.

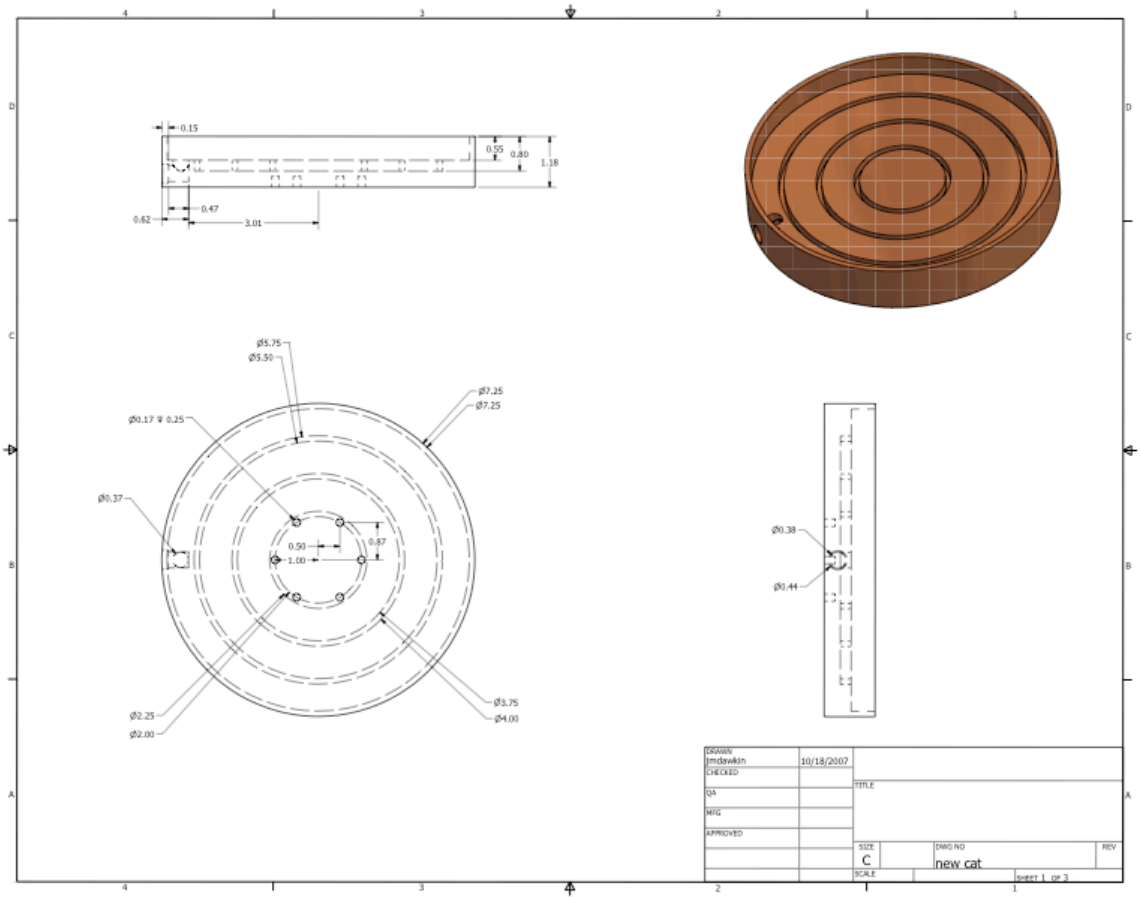

4.9.3 Effect on target operation and safety

Improves the seal and make installation easier and reduces stresses in other part of the target. Improves reliability of the joint.

4.10 External OPC

4.10.1 The problem

The conversion of the hydrogen to the para state took 3-4 days. We would like to reduce this to 1-2 days. In addition the operation of our existing external OPC based on liquid helium cooling will not be possible since it would require LHe operation inside the cave. Therefore we needed a new solution for the OPC which is to construct an external OPC.

4.10.2 Proposed change

An external O/P converter will be constructed in which the incoming H2 gas flows through a tube with catalyst cooled by a mechanical refrigerator.

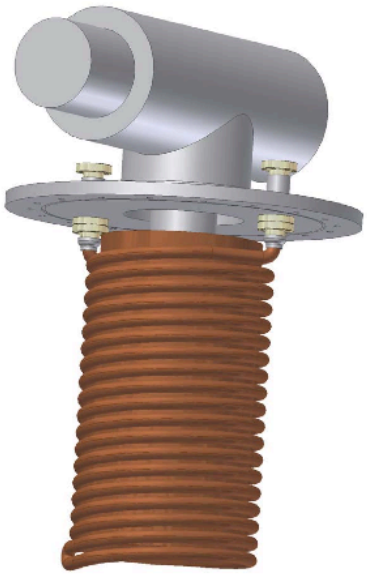

4.10.3 Analysis of its effect on operation and target safety

The introduction of an external OPC into the hydrogen line does not change the safety of the target system as long as the OPC is not the weakest point in the line. Hazards have been identified and mitigated as follows:

(1) **Leak in the hydrogen line entering and exiting the OPC.** The hydrogen gas will be conducted through the OPC system using SS tubing with welded components. Conflat feedthroughs welded to the external flange of the vacuum chamber of the OPC conduct the hydrogen through the vacuum flange, into the internal SS tubing which contains the converter material, and out again to the hydrogen line that feeds the fill/vent line of the target. Conflat flanges of 1.33" diameter are chosen based on the results of out test data on their behavior at temperatures below room temperature and under internal pressure. If there is a leak outside the OPC, it is limited to less than 25 slm and is handled by the cabinet ventilation and detected by H2 sensors in the cabinet. The possibility of a leak is reduced by the use of welded joints, the use of CF flanges for all demountable portions, and proper procedures for installation of the CF joints. Helium leak testing will be required in the operating procedure to be performed before introduction of hydrogen gas into the OPC system.

(2) **Prevention/mitigation of the possibility of liquification of hydrogen in the OPC.** The unmodified cryocooler has a base temperature that is low enough to liquefy the hydrogen. We propose to prevent this by introducing a passive, mechanical thermal short between the first and second cold stages which keeps the temperature of the coldest stage above 30K. Test measurements (see below) have established that this temperature, which is at least 8 degrees above the temperatures at which hydrogen can liquefy at gas pressures present in the fill line, is stable over long periods of operation. It is possible that over long periods of time the thermal contact between the two cold stages which defines their base temperatures might slowly change (through, say, slow relaxation of the force exerted by the bolts on the thermal link). Diode thermometers on the coldest portion of the OPC will be used to monitor the temperature to ensure that any such possible change in the thermal contact between the stages can be observed.

(3) **Rise in gas pressure in the OPC** This can be caused in various ways: (a) a failure of the refrigerator during operation in combination with a plug in the fill line, (b) a leak in the main vacuum chamber, thereby changing the temperature and therefore pressure of the cold gas in the OPC, (c) an accidental warming of the cold gas in the OPC due to operator error. The inlet and outlet lines for the hydrogen lines will possess relief valves (RV105 and RV106 in the drawing) which are connected to the main vent system. The heater which is present to regenerate the catalyst will be physically disconnected during hydrogen fills to reduce the possibility of operator error causing a transient pressure increase through an accidental warming of the cold gas in the converter area . The helium leak check and the removal of the heater connection before introduction of hydrogen gas into the OPC will be included in the operating procedure.

(4) **Rupture/leak of the fill line in the OPC.** One could imagine that some combination of an internal plug in the OPC combined with a failure of the refrigerator might lead to an internal pressure in the hydrogen line that is high enough to breach the fill line

or to induce a leak in the Conflat flange connections. The entire OPC is therefore located inside a ventilated cabinet. Pressure gauges on the main vacuum chamber are present which would indicate any such large leak occurring inside the vacuum chamber. A hydrogen sensor (International Sensor Technology) is placed inside the cryostat vacuum chamber to detect any hydrogen leak. The pump that evacuates the chamber will be vented to the hydrogen vent stack and during operation the pump will be valved off from the chamber. The vacuum chamber is protected by a 2 psid check valve CV105. Conflat flanges of the same size as those on the vacuum chamber and ceramic electrical feedthroughs have been previously leak tested with helium gas using greater internal pressures without a leak.

(5) **Blockage of the fill line.** Blockage of the fill line is made unlikely by the liquid nitrogen cold trap upstream of the OPC. Should the OPC become blocked despite this precaution, the relief valves RV105 and RV106 will protect against overpressures and to clear the blockage, the valve MV124 will be used.

4.10.4 Testing and results

An Austin Scientific cryocooler (model # M1020-CS) along with a CTI Cryogenics 8500 compressor was tested. We first ran the cryocooler unmodified and measured the temperature at both heat stations to be 53 K and 17 K. In order to raise the temperature of the second stage heat station to prevent H2 liquification, we installed a thermal coupling between the two stages in the form of a continuous piece of 0.14 inch thick copper . After cooling down again, the temperatures read 46 K and 30 K. This setup ran for a week and remained stable in temperature.

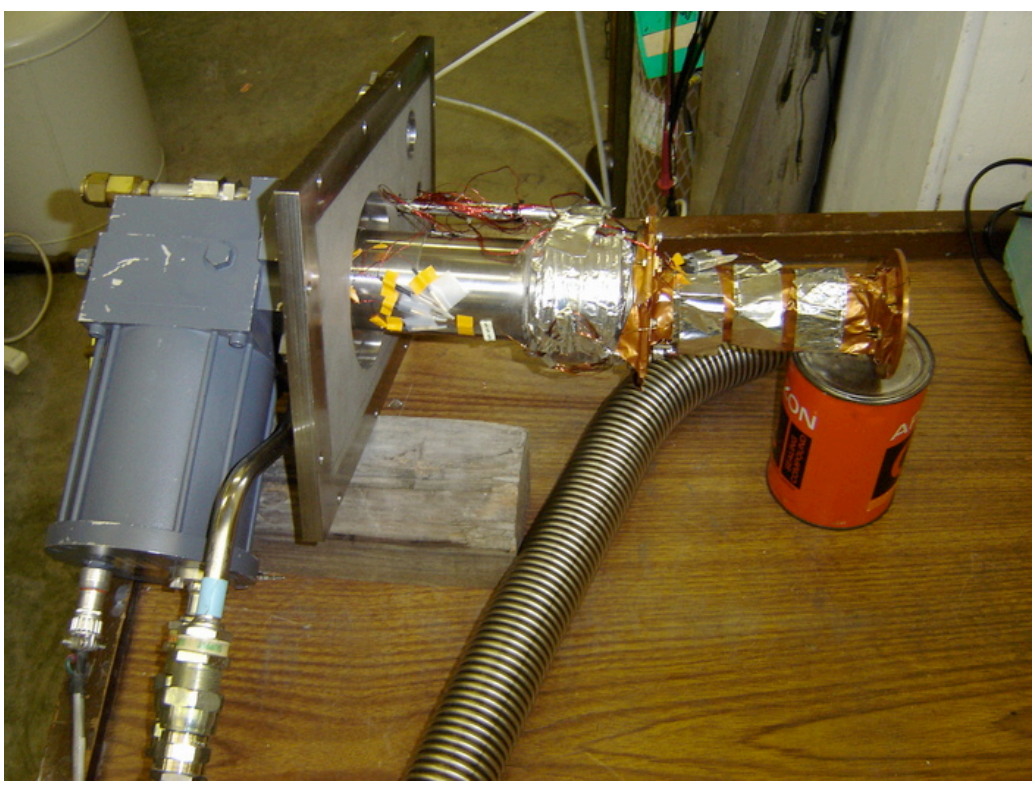

Figure: Cryo refrigerator of the OPC bolted on the vacuum flange.

4.11 Removal of most of the non-welded joints in the vacuum and hydrogen lines to outside of BL13 cave boundary

4.11.1 Present arrangement and problems

The hydrogen fill/vent line and the main vacuum line inside the cave at ORNL needs to be modified to minimize demountable flanges, use as much as possible all-welded components, and accommodate the increased length to the relief/vent box.

4.11.2 Proposed change

We will construct a new fill/vent line and vacuum line which possesses all the same safety features as in the LANSCE setup but extends the vacuum line outside the BL13 cave boundary where the vent isolation box is located. In order to incorporate all welded components into this tubing system requires a specific ordering of assembly of the system which is outlined below.

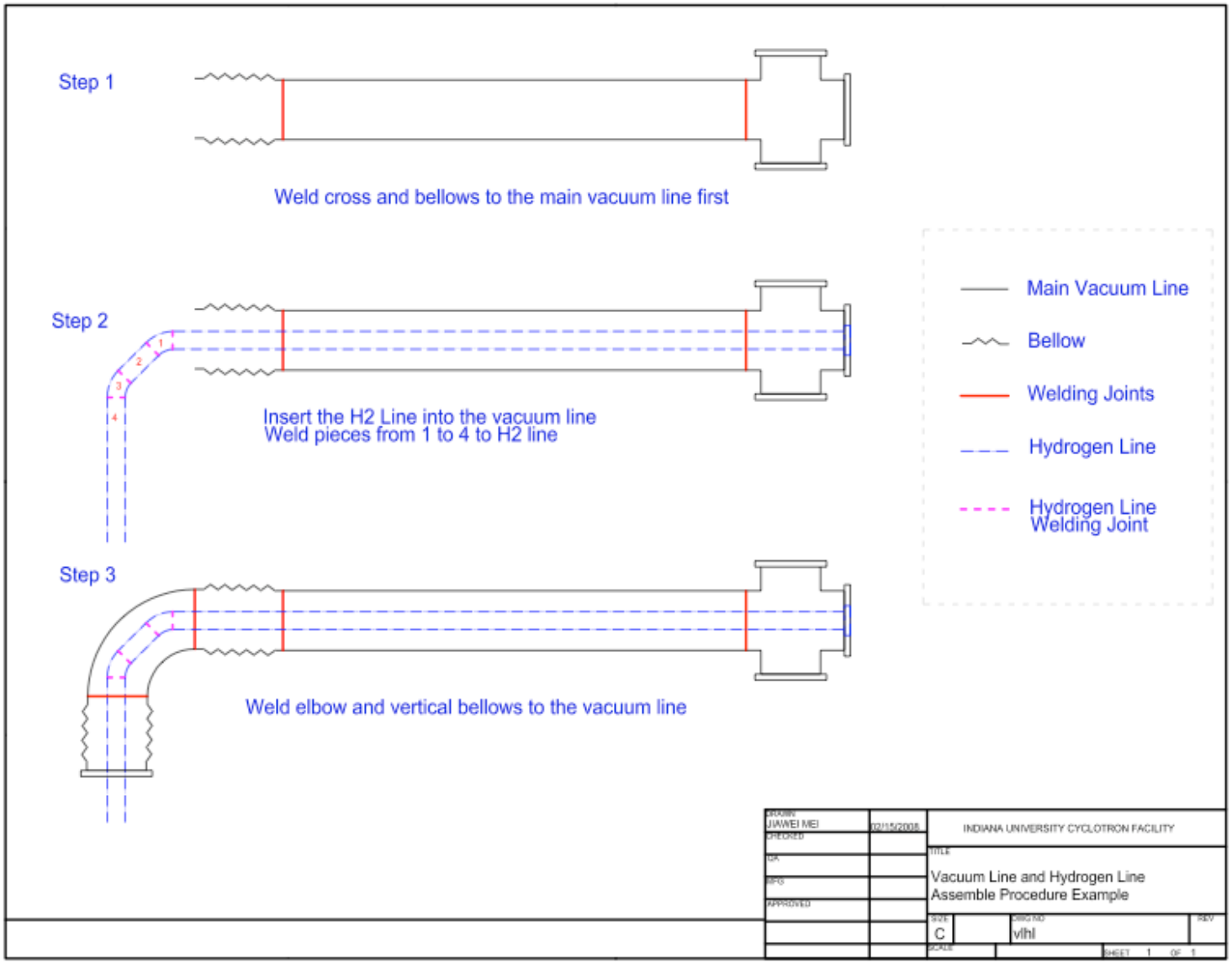
Step 1
Weld cross and bellows to the main vacuum line first
Step 2
1
2
3
4
Insert the H2 Line into the vacuum line
Weld pieces from 1 to 4 to H2 line
Step 3
Weld elbow and vertical bellows to the vacuum line
Main Vacuum Line
Bellow
Welding Joints
Hydrogen Line
Hydrogen Line Welding Joint
DRAWN
JIAWEI MEI
12/15/2008
CHECKED
QA
MFG
APPROVED
INDIANA UNIVERSITY CYCLOTRON FACILITY
TITLE
Vacuum Line and Hydrogen Line Assemble Procedure Example
SIZE
C
DWG NO
vlhl
REV
SCALE
SHEET 1 OF 1

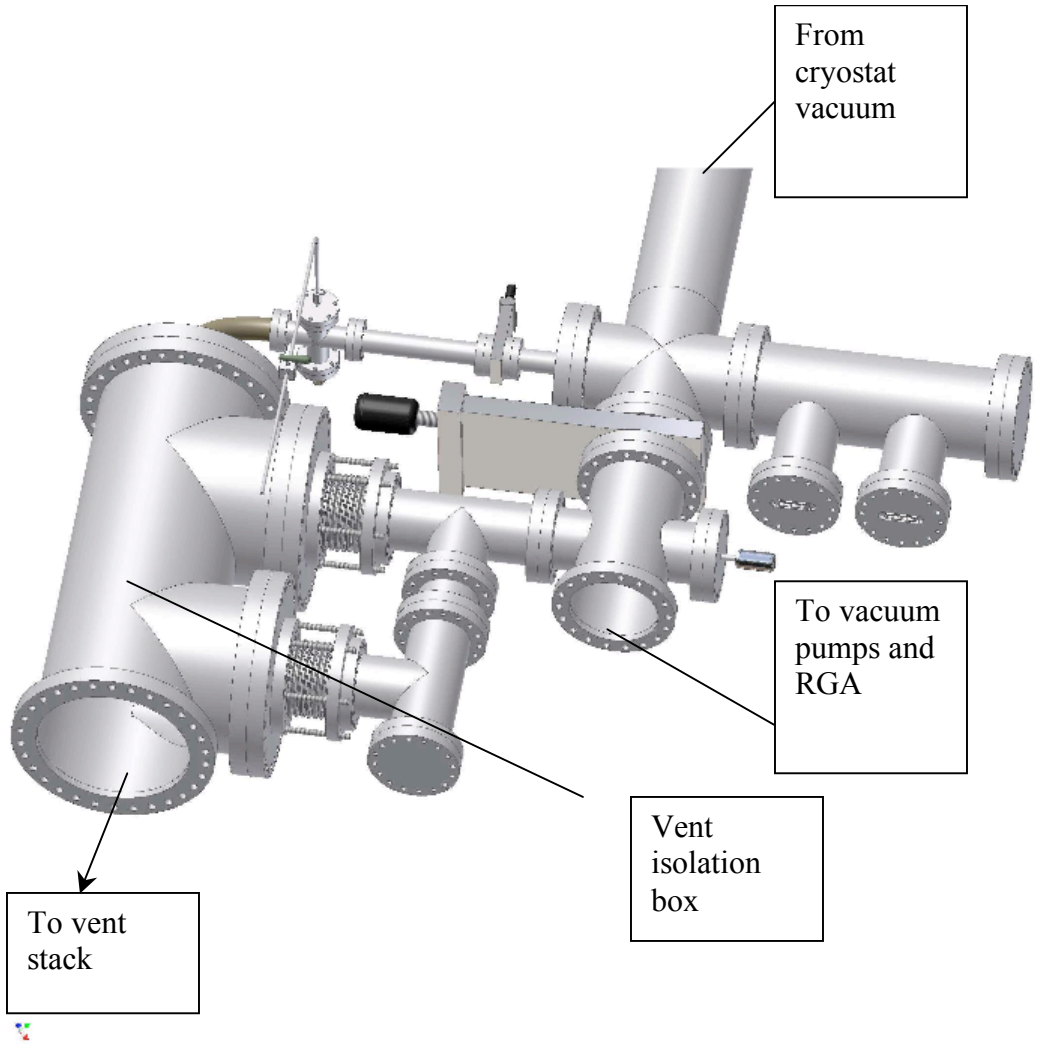

Figure: 3D rendering of the proposed arrangement of tubing outside the BL13 cave, including the integration of the fill/vent line with the vent isolation box.

4.11.3 Effect on target operation and safety

The proposed change will increase safety by reducing the number of joints and non-welded components in the hydrogen line and main vacuum system. The increased length makes a negligible change in the conductance of the hydrogen vent line. The detailed calculations are discussed in the Engineering document.