a D R A F T

FLUENT simulations for hydrogen distribution in the FNPB enclosure and an analog estimate for flow rate of a mixture of hydrogen and air through gaps in the concrete roof shielding

S. I. Penttila, ORNL and S. Covrig JLab

This write up summarizes our discussions of distribution of hydrogen in the FNPB enclosure (cave) when hydrogen from the NPDGamma target releases into cave during the event where the isolation vacuum and the hydrogen boundaries have failed. With FLUENT we simulate a case where the cave door is the only escape route for the hydrogen-air mixture and then we do a rough lower limit estimate for 10% hydrogen-air mixture flow rate in gaps of the concrete roof shielding of the cave.

When we have the heat transfer rate of $\dot{q}_{\text{eff}} \approx 2000$ W/m^2 to the NPDGamma LH_2 target, then the hydrogen release rate into the cave is estimated to be $\dot{m} = 1.8$ g/s [1] giving an target emptying time of t=635 s for the 1.2 kg NPDGamma LH_2 target.
In his parameter space study M. Harrington used Bernoulli's law to estimate the thickness of the air-hydrogen mixture layer in the ceiling of the cave that is required to vent the released hydrogen out from the cave with rate of 1.8 g/s [2]. The force driving the venting is the hydrogen buoyancy, a difference in the densities of pure air and air-hydrogen mixture which depends on the hydrogen concentration. If we assume the concentration of 10% by volume then the thickness of the layer has to be about 0.78 m if the effective driving thickness of the layer of 0.78/2 m is used [2].

<u>Results of hydrogen release and distribution simulations by FLUENT:</u>
The FLUENT was used to simulate the transport of the released hydrogen in the cave when the door is the only opening for the vent of the gas out from the cave. In the model the isolation vacuum is failed and the target has an opening into the cave next to the target vessel. The hydrogen source is about in the middle of the cave, see figure 1 for the geometry. The target is modeled as a cylinder with 27 cm diameter and 30 cm length. The simulation assumes that the released H_2 is thermalized to 300 K, no release velocity from the target vessel, only buoyancy and diffusion are included, and the release rate of H_2 is 18 g/s, ten times larger than what it would be with $\dot{q}_{\text{eff}} \approx 2000$ W/m^2 heat transfer rate. In the simulation the source is on only 10 s which well describes the steady-state hydrogen release and transport in the cave, and then the source is turned off and the hydrogen transport in the cave is simulated up to about 17s, at which point the maximum hydrogen concentration by volume in the cave drops below 10%. It would take about 67 s for the full 1.2 kg of hydrogen liquid to completely vaporize from the target at the rate of 18 g/s, this is too long for the present computing power to calculate in rational time. Therefore, the simulation was run in the vaporization mode for 10 s and then followed by the dispersion mode for another 7.5 s. No combustion was assumed in the cave only the gas transportation.

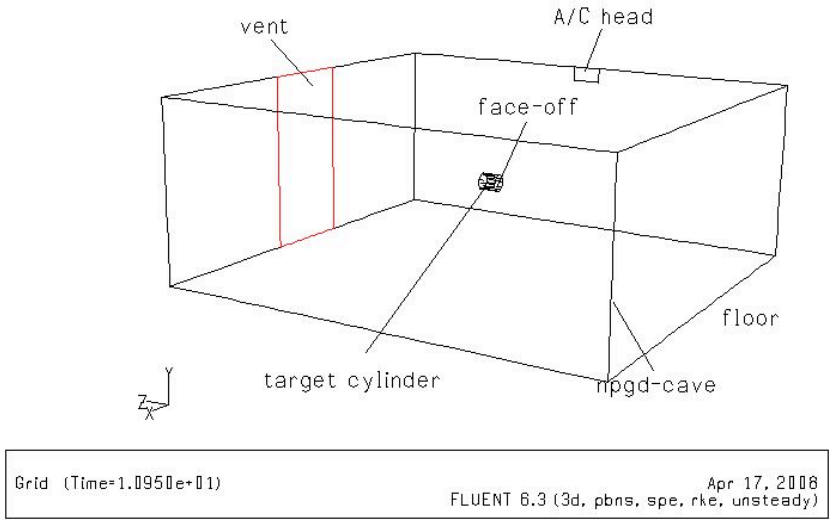

Fig. 1. Geometry of the cave and LH_2 target for the hydrogen release and transport simulations by FLUENT. Vent is the cave door.

Figure 2 shows a steady-state H_2 volumetric distribution in cave after 10 s of releasing hydrogen gas from the target with the rate of 18 g/s. In a volume directly above the target the hydrogen concentration exceeds 18 % which is the hydrogen detonation concentration in air at STP.

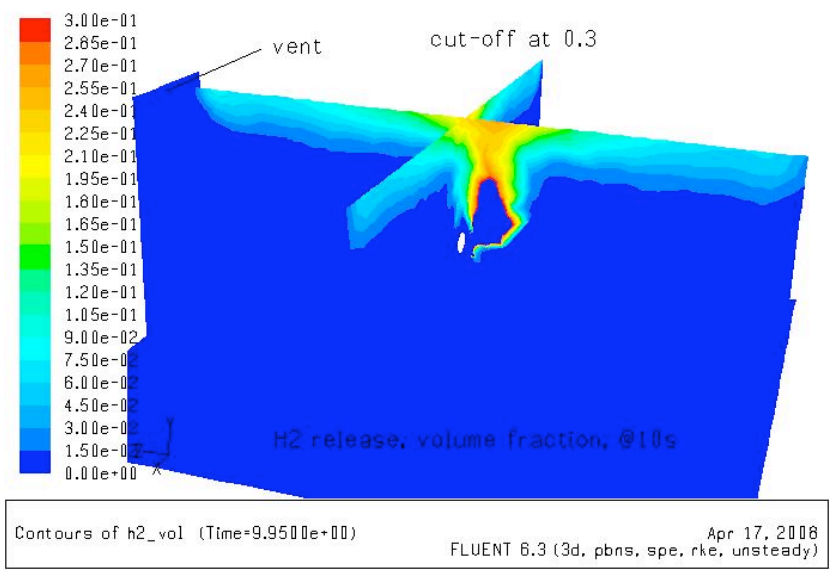

Fig. 2. A steady-state hydrogen distribution in the cave after a 10 s release of hydrogen with the rate of 18 g/s. The cave door (vent) is on the left side of the simulated volume.

After 10 s the hydrogen source is turned off and the hydrogen transport in the cave is followed another 7 s. Figure 3 shows the hydrogen distribution at the moment of 17.5 s

after the start, the highest concentration at the end of the cave has decreased to a 4% level; 4.1% is the lower flammable limit in air at STP.

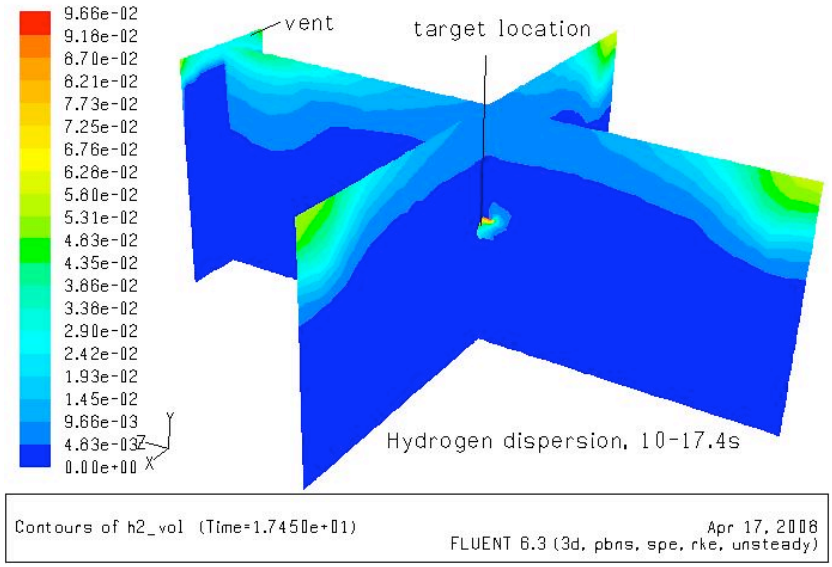

Fig. 3. Volumetric hydrogen distribution in cave after 17.5 s from the start and when the source was stopped at 10 s.

Figure 4 shows the velocity distribution of gas in the cave at 17.5 s. The cave door area has a velocity structure indicating that H_2 flows out from the cave at the ceiling level and air flows out at the bottom, but there also is a layer of incoming gas between these two flow regimes.

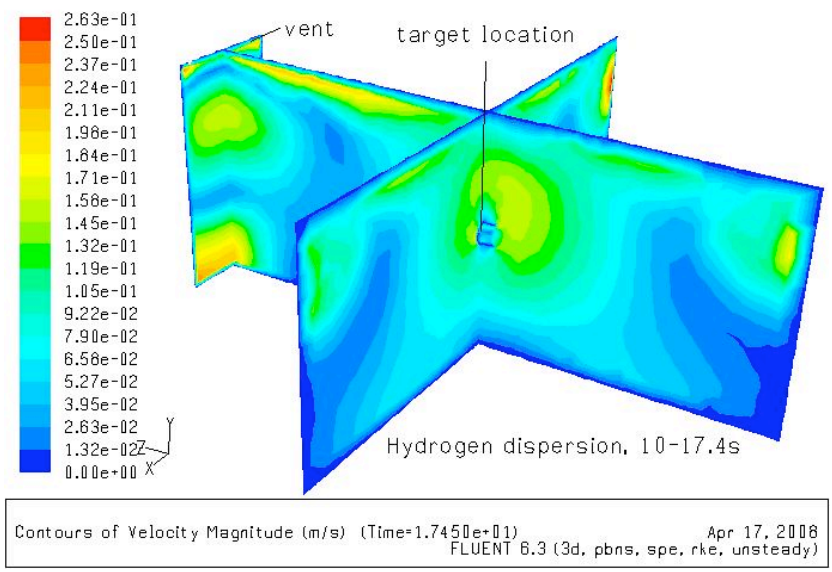

Fig. 4. Velocity distribution of the gases in the cave at 17.5 s.

Next simulations we have the H_2 release into the cave1.8 g/s or 0.1125kg/s/m^3. This is a slow release speeds compared to the running time! The simulation has been run for 227 s

with the source of H_2 on. During this period about 408 g of H_2 has been released and of which about 346 g are still in the cave and 60 g have vented out. The steady-state transport in the cave has been achieved at some point during this time period.
There are two movies, one with the distribution of gas-mixture velocity in the cave and one with the distribution of hydrogen volume fraction in the cave. The scale was set on AUTO, so do not expect e.g. "green" to signify the same value range in all the frames! The scale for each frame is on the left, the time of the simulation at the bottom.
The movies were originally mpg but they were compressed to 3.2s based on the number of frames, not the time of the frame! I tried to expand the movie time so that you can see it better and decide when the steady state sets in. But I used Windows Movie Maker (which comes free with all windows os) under a 64bit Vista Enterprise. One thing I noticed, my laptops' WMM (under 32bit XP) cannot see them, although it acknowledges that the files were made by a version of WMM - three cheers for Mr. Gates! Let me know if you have problems with the movies (it would be nice if you could see the release process happening).
I hope this settles the remaining questions about this problem.
Let me know if you need anything else, how the review goes and thank you for adding my name to the document,

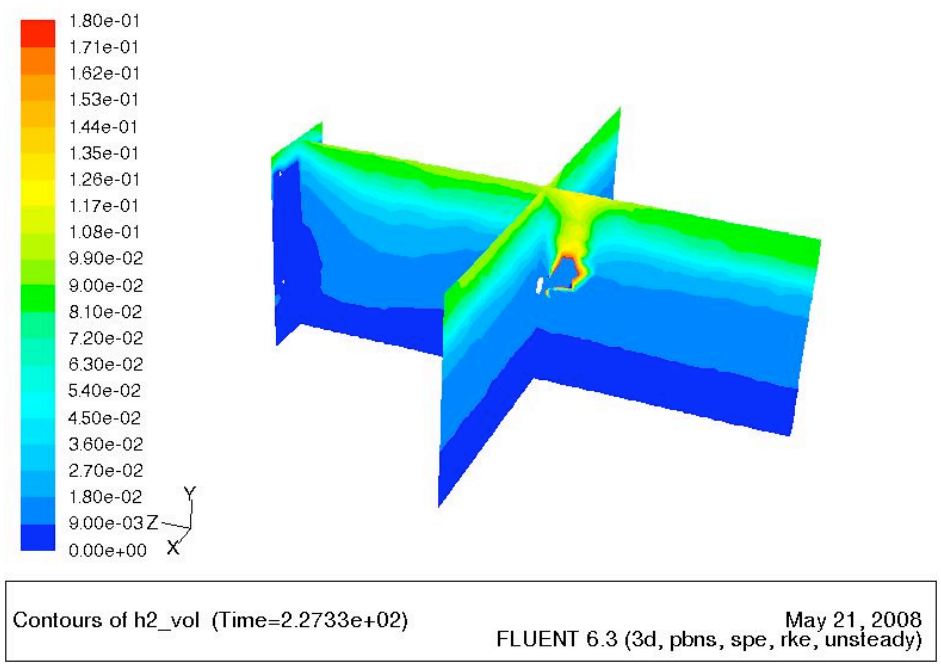

Fig. 5.

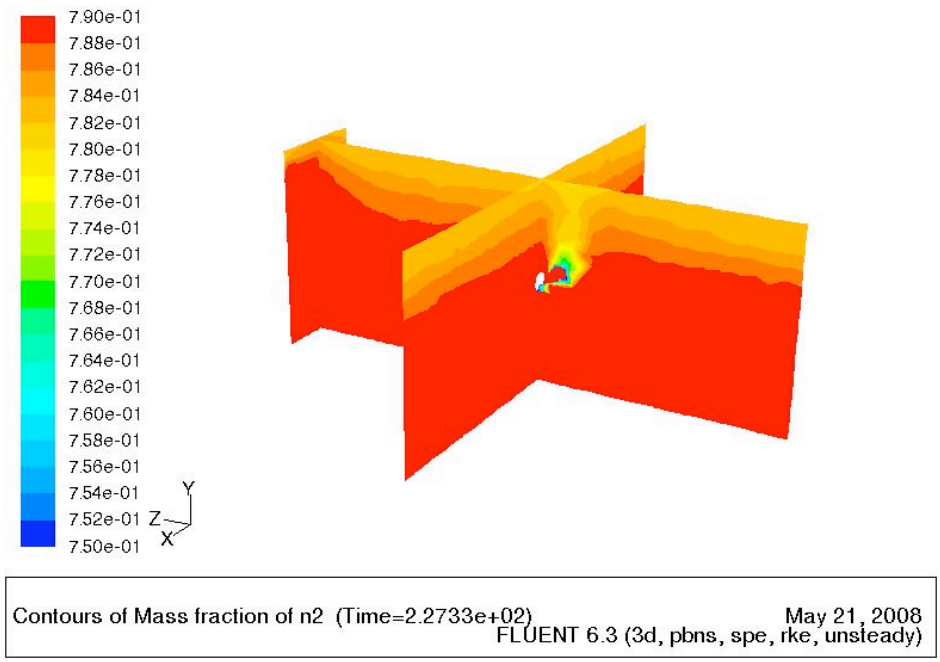
7.90e-01
7.88e-01
7.86e-01
7.84e-01
7.82e-01
7.80e-01
7.78e-01
7.76e-01
7.74e-01
7.72e-01
7.70e-01
7.68e-01
7.66e-01
7.64e-01
7.62e-01
7.60e-01
7.58e-01
7.56e-01
7.54e-01
7.52e-01
7.50e-01
Y
Z
X
Contours of Mass fraction of n2 (Time=2.2733e+02)
May 21, 2008
FLUENT 6.3 (3d, pbns, spe, rke, unsteady)

Fig. 6.

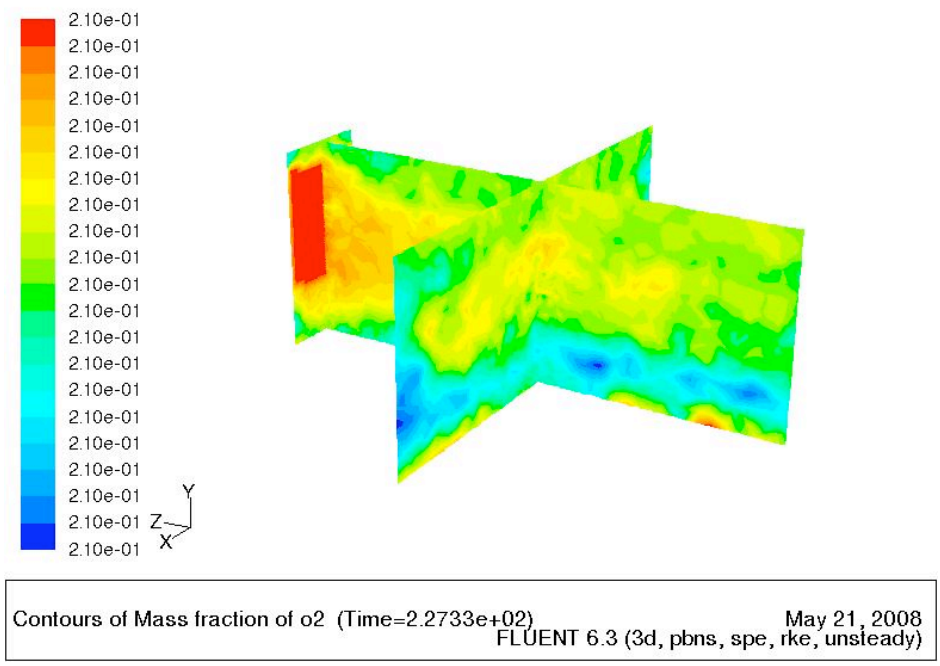
2.10e-01
2.10e-01
2.10e-01
2.10e-01
2.10e-01
2.10e-01
2.10e-01
2.10e-01
2.10e-01
2.10e-01
2.10e-01
2.10e-01
2.10e-01
2.10e-01
2.10e-01
2.10e-01
2.10e-01
2.10e-01
2.10e-01
2.10e-01
2.10e-01
Y
Z
X
Contours of Mass fraction of o2 (Time=2.2733e+02)
May 21, 2008
FLUENT 6.3 (3d, pbns, spe, rke, unsteady)

Fig. 7.

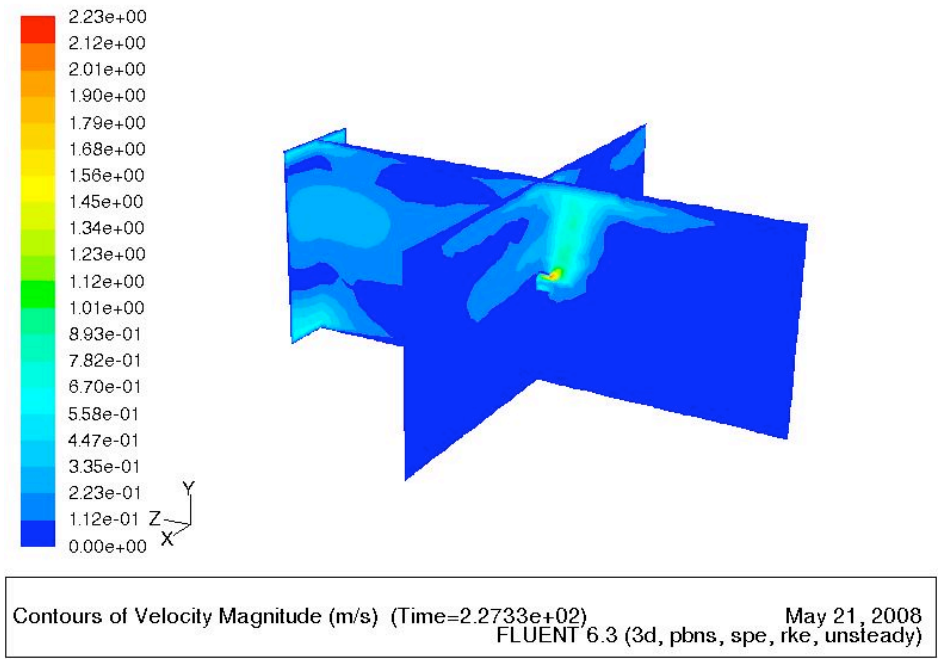

Fig. 8.

<u>An analog estimate for a lower limit of flow in gaps of the concrete roof shielding of the FNPB cave:</u>

Next we estimate a lower limit for a flow rate of the H_2-air mixture in gaps of the FNPB concrete roof shielding. Figure 5 shows the concrete shielding structure of the FNPB. The roof has nine main shielding blocks with key blocks (light blue, see also figure 6). Effectively 14 joints are accessible from the cave volume. Figure 6 shows how the gap between the concrete blocks has been modeled; the vertical gaps have assumed to have

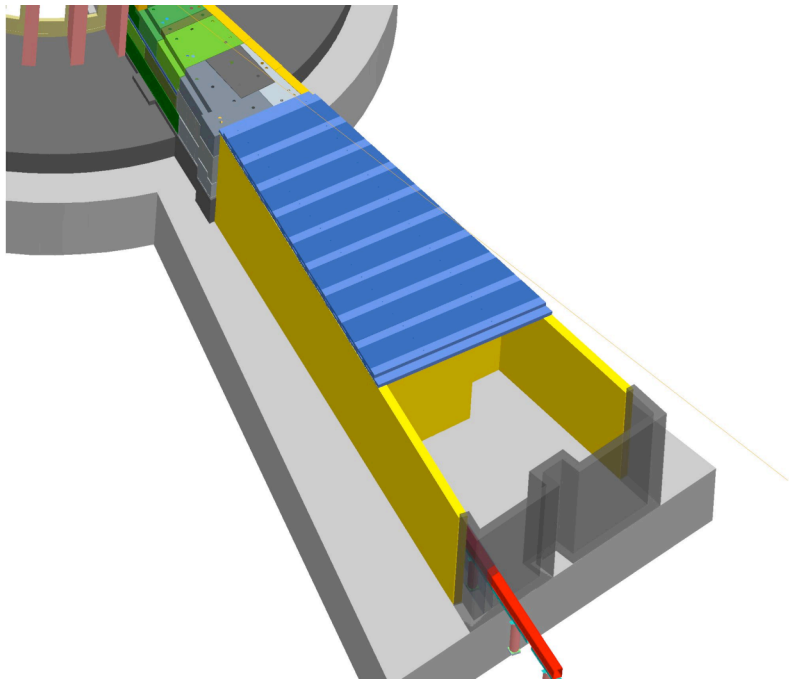

Fig. 9. The FNPB concrete shielding structure.

a 1” clearance and in the horizontal joint is a shim to level the tip of the roof. We assume that the height of the horizontal gap, the shim, is 0.25”, and between shims are channels that are assumed to be 3” wide.

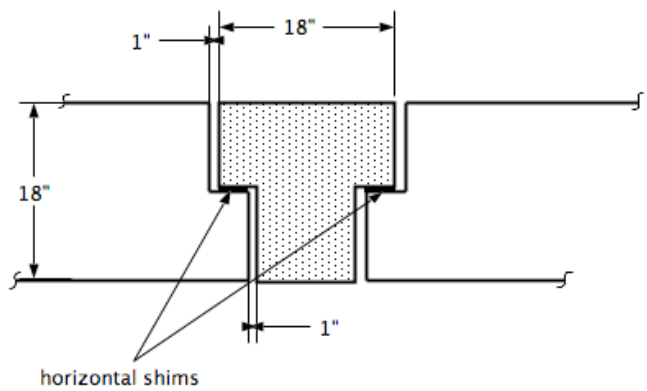

Fig. 10. A cross section of the concrete roof shielding section at the FNPB.

Characteristics of the flow in the channels depends on the size and other details of the channels and flow rate. At STP the free mean path of a hydrogen molecule in pure hydrogen is $\lambda \approx 1.3 \times 10^{-7}$ m or an air molecule in pure air $\lambda \approx 6.5 \times 10^{-7}$ m indicating that the flow in the channel is in the viscose regime. For a Reynolds number *Re*>4000 the flow regime is turbulent and for *Re*<2000 it is laminar.

The flow in the channel is driven by buoyancy due to the difference in the densities of air and the hydrogen-air mixture. We assume a 10% H_2 concentration in the cave and an effective thickness of the hydrogen-air mixture layer of 0.78/2 m. The pressure difference across the shielding block is then ΔP=0.45 Pascal=3.40×10^{-3} Torr.

Let's assume that the flow is in the turbulent regime. The pressure drop due to an incompressible fluid flowing in a channel is given by the Darcy formula [3, 4]

$$\Delta P = \frac{1}{2} f(\frac{L}{d})\rho v^2,$$

where f is a dimensionless friction factor called Darcy's friction factor, L is the length of the channel, and d is the diameter of the channel, $K = f(L/d)$ is called the resistance coefficient, v is the flow velocity

$$v = \frac{4}{\pi}\frac{\dot{V}}{d^2},$$

$\dot{V}$ is a volumetric flow in the channel that we assume to be $\dot{V}$ = 0.65 l/s=6.5×10^{-4} m/s and $d = \sqrt{\frac{0.25"\times 3"}{\pi}} \approx 2.5\times10^{-2}$ m. For the velocity we get v = 1.3 m/s. The friction factor f depends on the nature of the flow. For laminar flow $f = 64/Re$. For turbulent flow, f depends not only on the Reynolds number but also on the roughness of the wall of the flow channel. For f t he following approximate formula (Blasius friction factor) can be used

$$f = \frac{0.316}{Re^{1/4}}.$$

The Reynolds number is obtained from

$$Re = \frac{\rho v d}{\eta},$$

where ρ is the density of the fluid and η is the viscosity of the fluid. For 10% air-hydrogen mixture at STP ρ=1.0678 kg/m^3 and η=163×10^{-6} poise, where poise=g/(cm s). With the assumed small flow rate of 0.65 l/s, we obtain Re=2133 and the flow is in the regime between laminar and turbulent flow.
Using Reynolds number, we get for the flow resistance coefficient of the straight section of the channel

$$K = \frac{0.316}{2133^{1/4}}(\frac{2.5\times10^{-2}}{23\times10^{-2}}) \approx 5.1\times10^{-3}.$$

K value for the straight section of the channel is small, and with the small flow we could be in the laminar regime where $f = 64/Re$.
The K factor represents a friction between the flow and the channel. In addition to the pressure drop due to the friction in a straight sections, there are additional contributions to the pressure drop at changes in the cross sections, and bends. These contributions can be taken into account by assigning an effective value of K at each of these components. Estimated K values for each of components are listed in table 1. The total resistance coefficient of the channel is K_{tot} = 7.

Table 1. Resistance coefficients K for components of the flow channel

Component	K
Entrance	1
2 90-degree bends	2
3 channel sections	3
Exit	1
Total	7

Using $K_{\text{tot}} = f(L/d)$ and $\dot{m} = \dot{V}\rho = \frac{\pi\rho}{4} d^2 v$

$$\dot{m}^2 = \frac{\pi^2 \Delta P \rho d^4 Y}{8K_{\text{tot}}},$$

where the correction factor, the expansion correction coefficient Y, is defined to be the ratio of the mass flow rate of a compressible fluid $\dot{m}$ to the mass flow rate of the incompressible fluid $\dot{m}_{\text{i}}$ under the same condition

$$Y = \frac{\dot{m}}{\dot{m}_{\text{i}}}.$$

Y depends on K and ΔP. Values of Y as a function of ΔP and K can be found in Ref. [5]. Next we use $Y = 0.678$. With $K = 7$, ΔP=0.453 Pa, ρ = 1.0678 kg/m^3, $Y = 0.7$, and d = 2.5×10^{-2} m, we obtain for the mass flow in the channel of $\dot{m} = 0.15$ g/s. Since the hydrogen concentration is 10%, we have the corresponding hydrogen flow of 0.015 g/s. This means that we would need to have 113 this kind of channels in the ceiling to take care of the hydrogen release rate of 1.8 g/s.

Let us assume that flow in the channel is in the laminar regime. We model the channel as a rectangular channel with three sections in series; C_1=1”×3”× 9”, C_2=0.25”×3”×3”, and C_3=1”×3”×9”, where the first number gives the size of the gap, the second gives the width, and the third the length, see figure 6.
The total conductions is then $1/C_{\text{tot}} = 1/C_1 + 1/C_2 + 1/C_3$ and the through put of the channel is given by Q=$C\Delta P$. The pressure difference ΔP=0.453 Pa and the conductance of the channel we need to calculate. Conductance in viscous flow within a rectangular cross section channel is given by

$$C = \frac{4}{48}\frac{a^3 b}{\eta}\frac{\overline{P}}{L}\psi,$$

where C is in l/s, a is the small side and b the large side of the rectangle in cm, η is the viscosity of the gas mixture in poise, $\overline{P}$ is the average pressure in channel in Torr, L is the length of the channel in cm, and ψ is a correction factor depending on the ratio a/b and given in Ref. [6]. Using values for the parameters given above we get for the conductance of the channel

$$C_{\text{tot}} \approx 3.4\times10^4 \text{ l/s}.$$

The conduction of the channel is defined by the section with the shim. For the through put we get Q=$3.4\times10^{-3}\times3.4\times10^4$ Torr l/s ≈116 Torr l/s.

We know that the number of molecules crossing different cross sections in the channel have to be same, so

$$Q = \dot{N}kT,$$

where k is the Boltzmann constant and T temperature. We obtain for the number of molecules going through the channel

$$\dot{N} = 3.7 \times 10^{21}\ \mathrm{s}^{-1}.$$

At STP one mole is 22.4 liters, then the volumetric flow is 0.14 l/s of the mixture of 10% hydrogen concentration. We need about 150 flow channels to take care of the hydrogen release of 21 l/s.

References

[1] S. Penttila, *Hydrogen release rate from the NPDGamma liquid hydrogen target into the BL-13 shielding structure in a failure of target vacuum and hydrogen boundaries*, 2008.

[2] M. Harrington, *Parameter Study*, 2008.

[3] B. S. Massey, Mechanics of Fluids, 4th Ed., (Van Nostrand Reinhold Co.,New York, 1979)

[4] R. D. Blevins, Applied Fluid Dynamics Handbook, (Krieger, Malabar, FL, 1992).

[5] Flow of Fluids Through Valves, Fittings, and Pipe, Crane Technical Paper No. 410, Crane Co., New York, 1991.

[6] A. Roth, *Vacuum technology*, 2nd edition, North-Holland, 1987, p. 78.