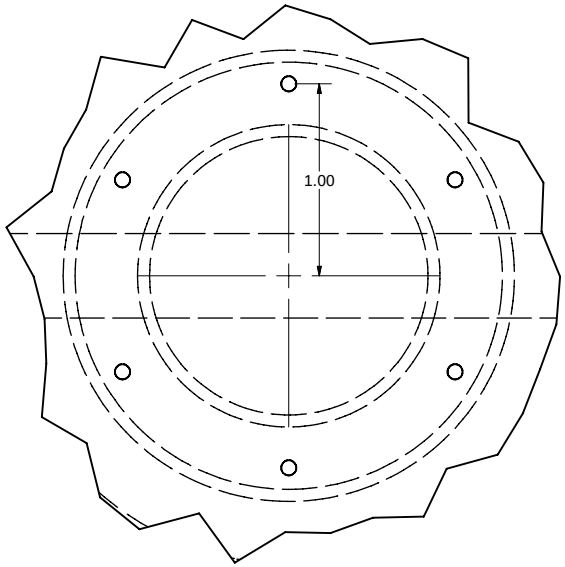

DETAIL C
SCALE 2 : 1

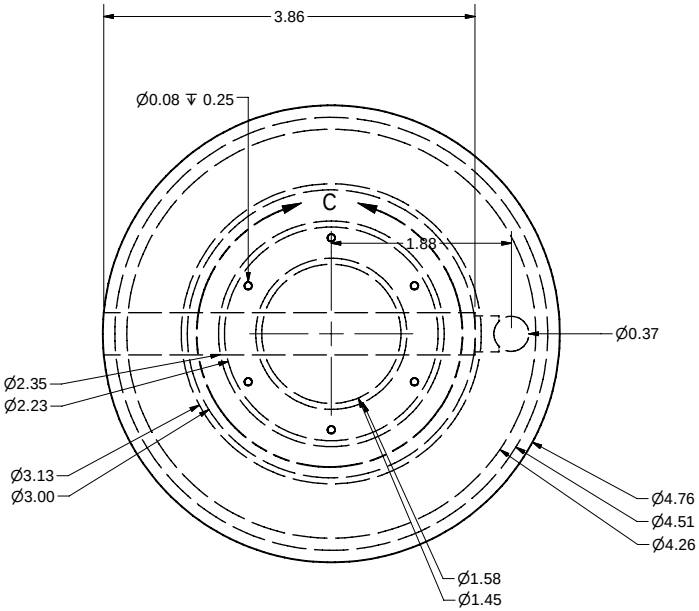

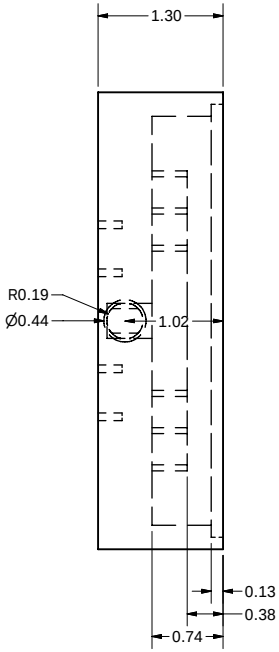

DRAWN jmdawkin	10/18/2007	
CHECKED		TITLE
QA		
MFG		
APPROVED		
		SIZE C / DWG NO new cat / REV
		SCALE / SHEET 1 OF 3

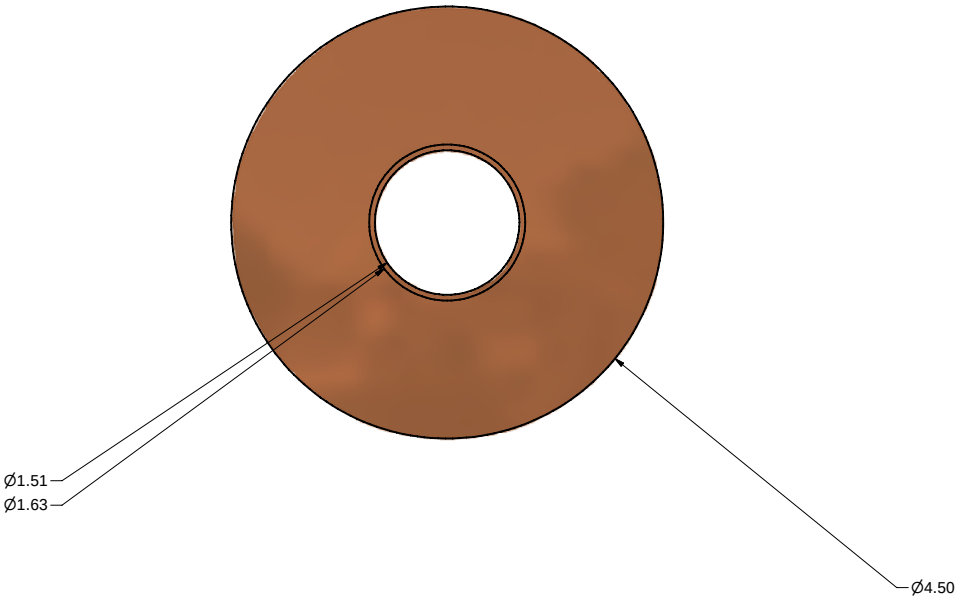

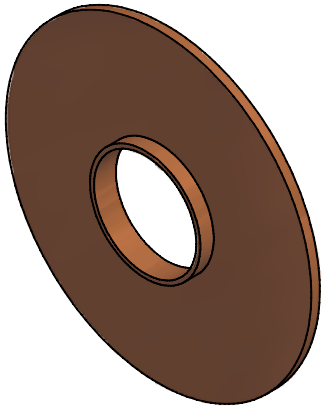

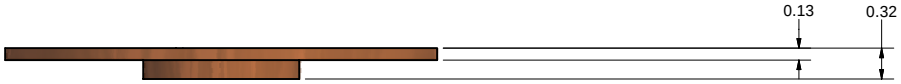

DRAWN jmdawkin	10/18/2007	
CHECKED		TITLE
QA		
MFG		
APPROVED		SIZE C / DWG NO new cat / REV
		SCALE / SHEET 2 OF 3

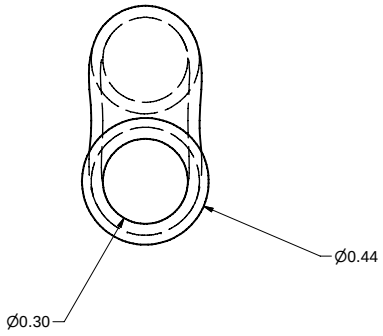

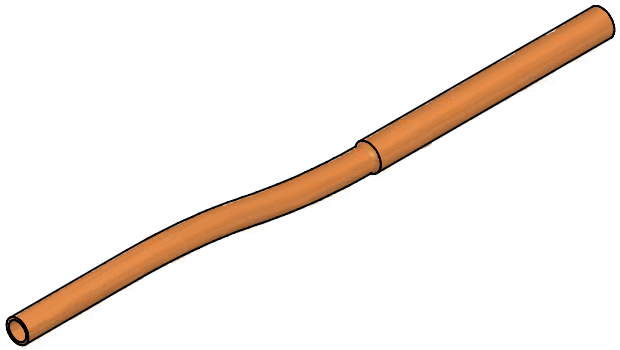

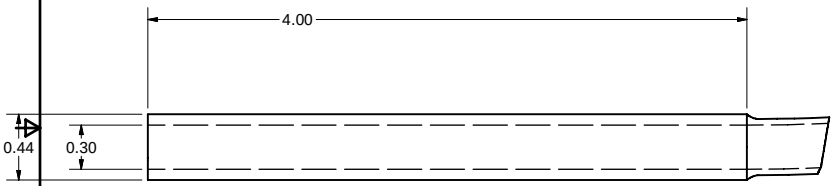

DETAIL A
SCALE 1.56 : 1

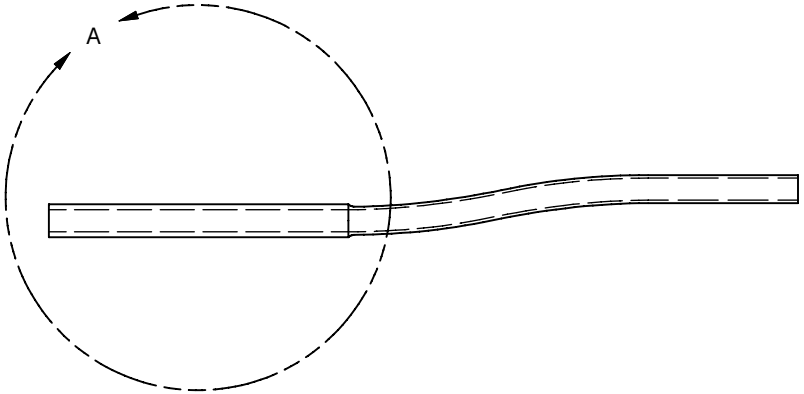

DRAWN jmdawkin	10/18/2007	
CHECKED		TITLE
QA		
MFG		
APPROVED		SIZE C / DWG NO new cat / REV
		SCALE / SHEET 3 OF 3