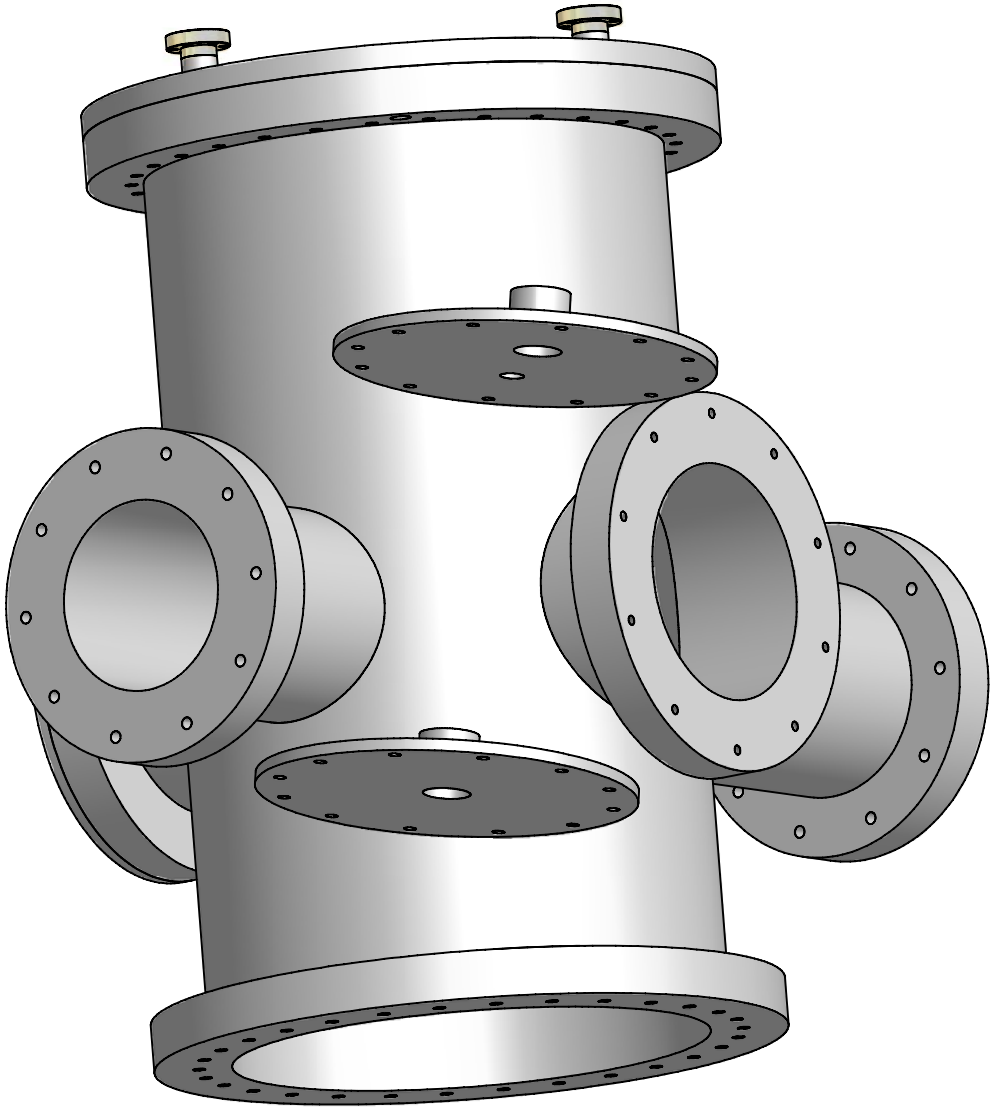

DRAWN jmdawkin	1/28/2008	
CHECKED		TITLE
QA		
MFG		
APPROVED		SIZE C / DWG NO new ext opc / REV
		SCALE / SHEET 1 OF 6

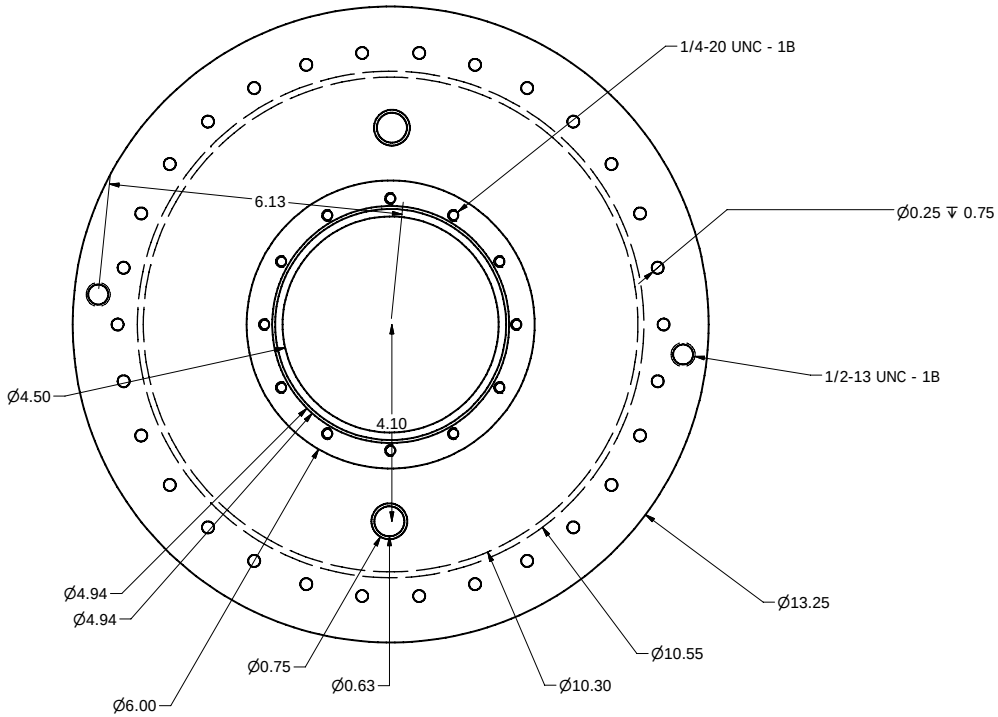

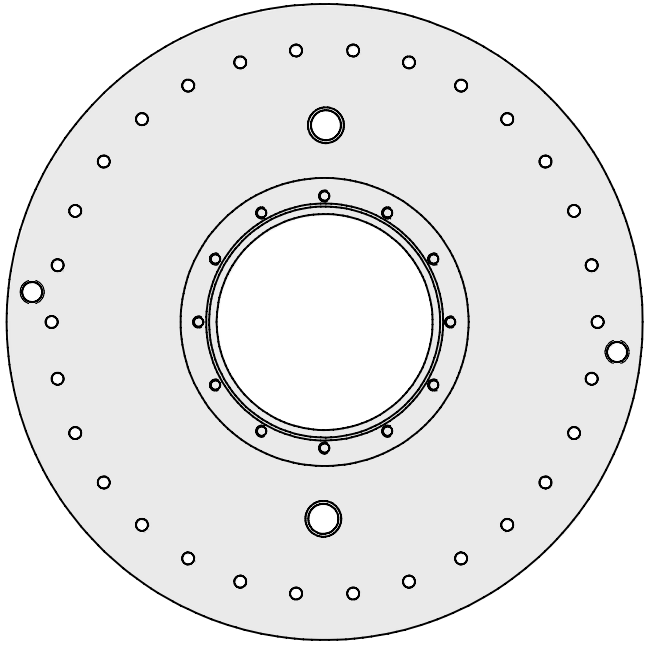

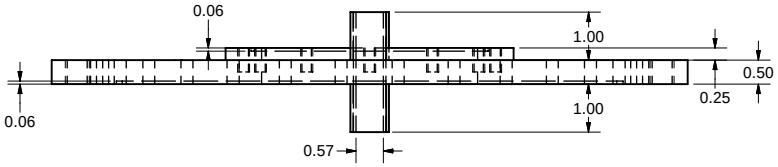

DRAWN jmdawkin	1/28/2008	
CHECKED		TITLE
QA		
MFG		
APPROVED		SIZE C / DWG NO new ext opc / REV
		SCALE / SHEET 2 OF 6

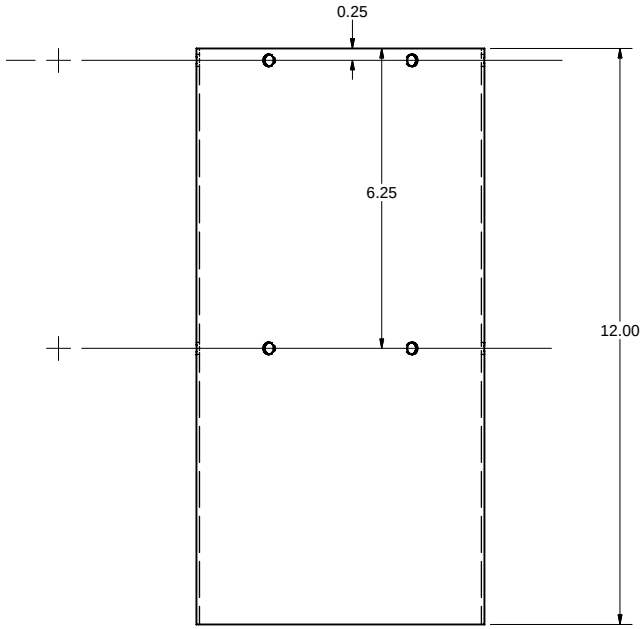

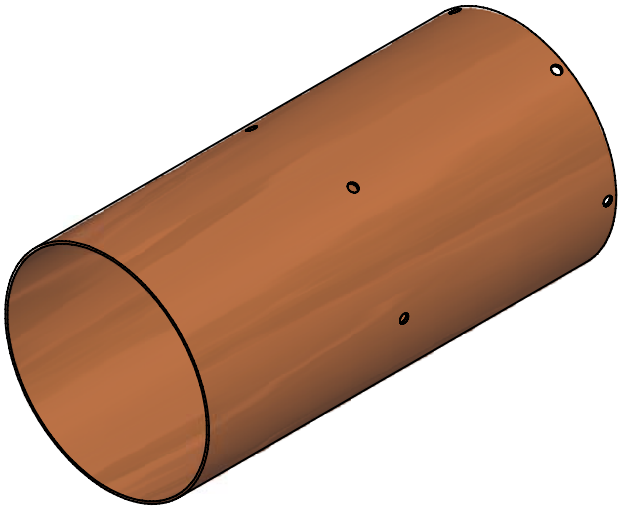

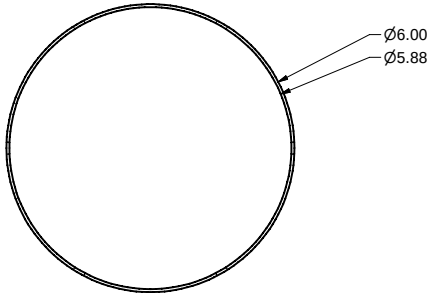

DRAWN jmdawkin	1/28/2008	
CHECKED		TITLE
QA		
MFG		
APPROVED		
		SIZE C / DWG NO new ext opc / REV
		SCALE / SHEET 3 OF 6

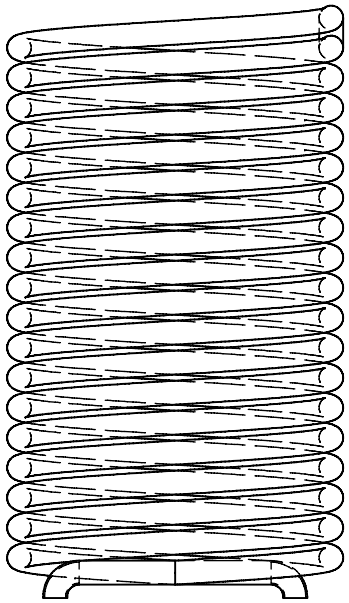

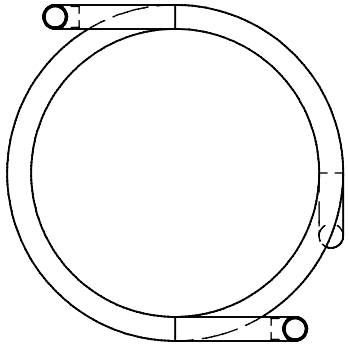

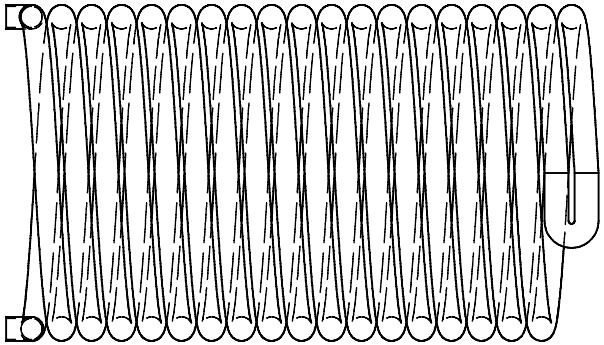

DRAWN jmdawkin	1/28/2008				
CHECKED		TITLE			
QA					
MFG					
APPROVED		SIZE C		DWG NO new ext opc	REV
		SCALE		SHEET 4 OF 6	

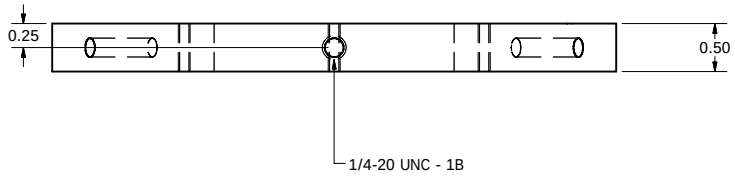

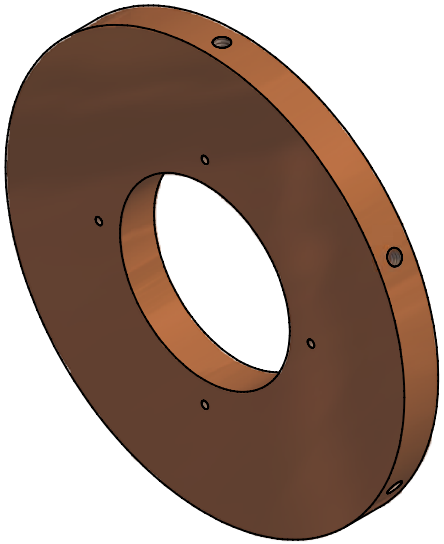

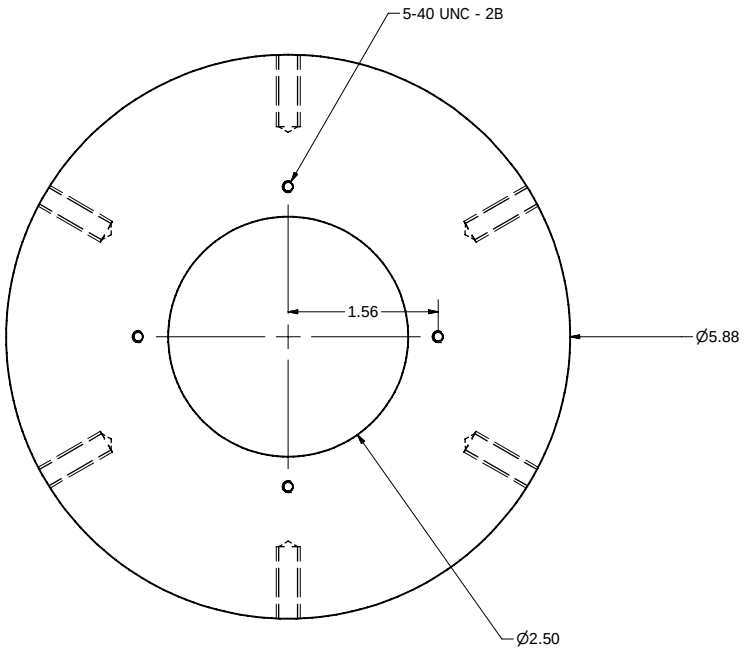

DRAWN jmdawkin	1/28/2008	
CHECKED		TITLE
QA		
MFG		
APPROVED		SIZE C / DWG NO new ext opc / REV
		SCALE / SHEET 5 OF 6

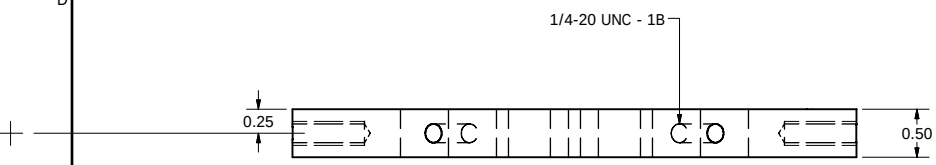

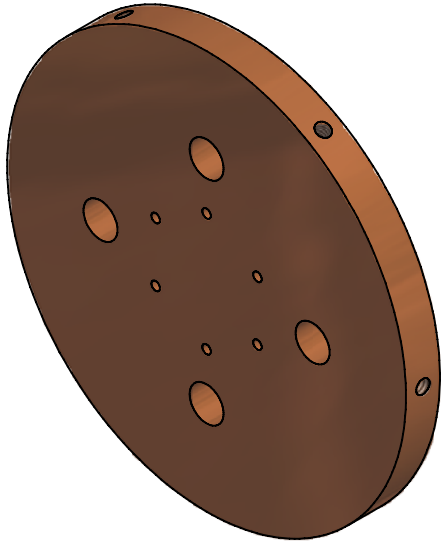

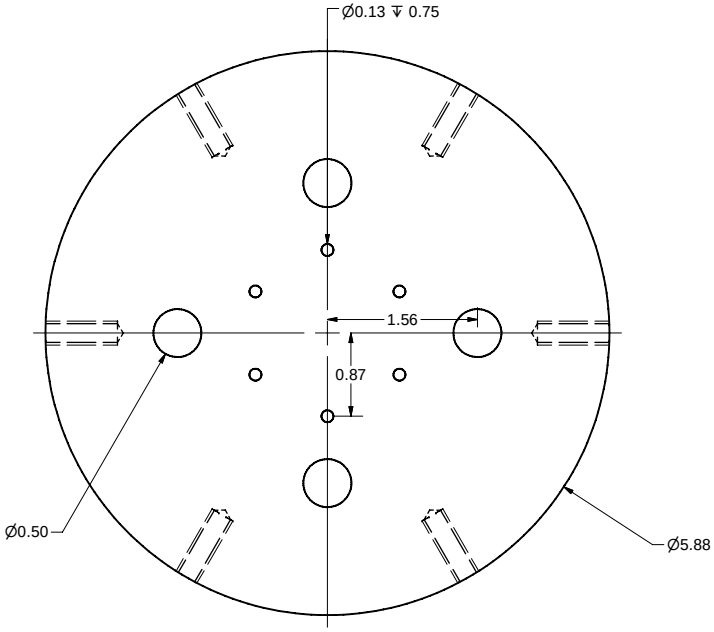

DRAWN jmdawkin	1/28/2008	
CHECKED		TITLE
QA		
MFG		
APPROVED		SIZE C / DWG NO new ext opc / REV
		SCALE / SHEET 6 OF 6