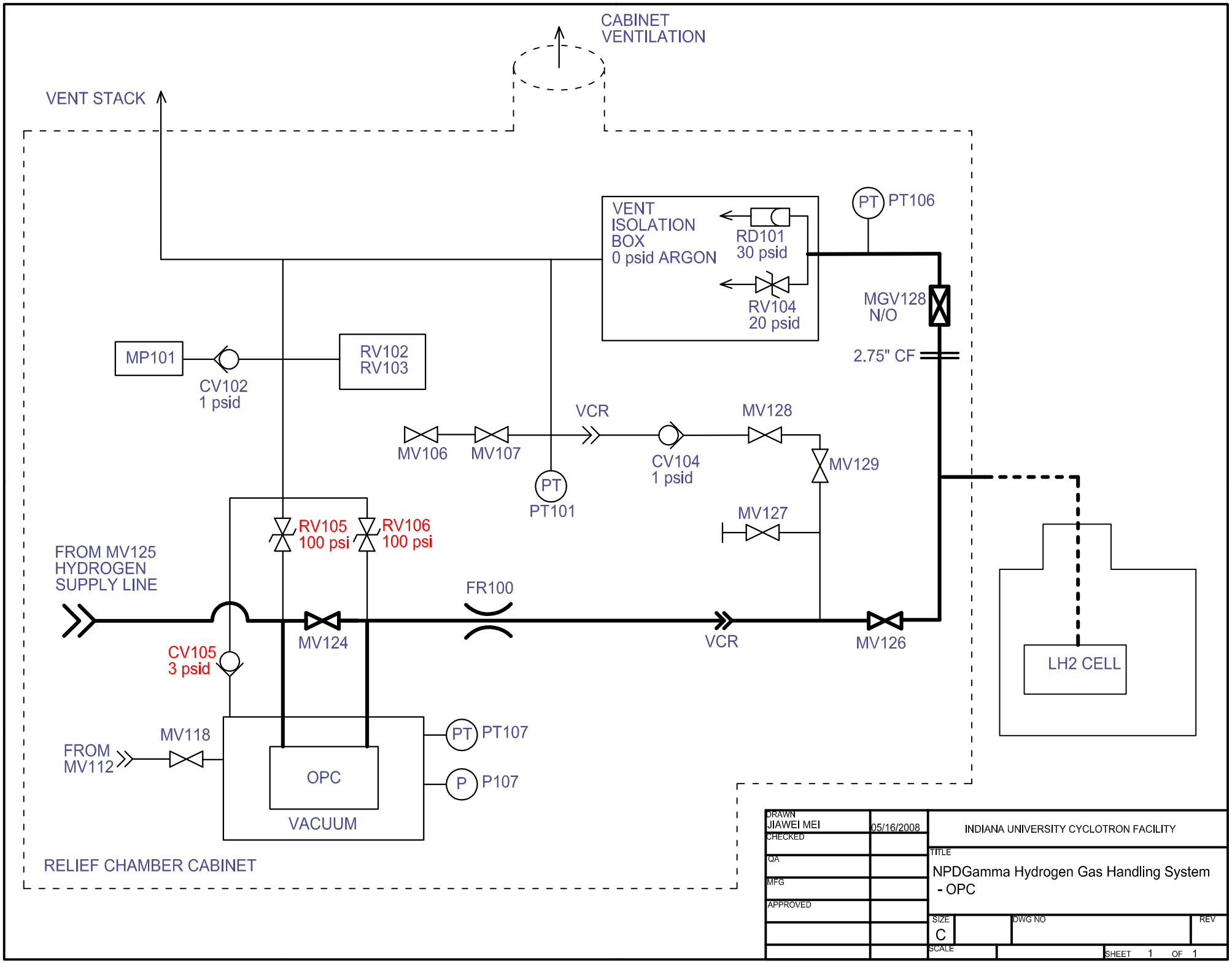
CABINET VENTILATION
VENT STACK
VENT ISOLATION BOX 0 psid ARGON
RD101 30 psid
RV104 20 psid
PT
PT106
MGV128 N/O
2.75" CF
MP101
CV102 1 psid
RV102 RV103
VCR
MV128
MV106
MV107
CV104 1 psid
MV129
PT
PT101
MV127
RV105 100 psi
RV106 100 psi
FROM MV125 HYDROGEN SUPPLY LINE
FR100
MV124
VCR
MV126
LH2 CELL
CV105 3 psid
MV118
FROM MV112
OPC
VACUUM
PT
PT107
P
P107
RELIEF CHAMBER CABINET
DRAWN
JIAWEI MEI
05/16/2008
CHECKED
QA
MFG
APPROVED
INDIANA UNIVERSITY CYCLOTRON FACILITY
TITLE
NPDGamma Hydrogen Gas Handling System - OPC
SIZE
C
DWG NO
REV
SCALE
SHEET 1 OF 1