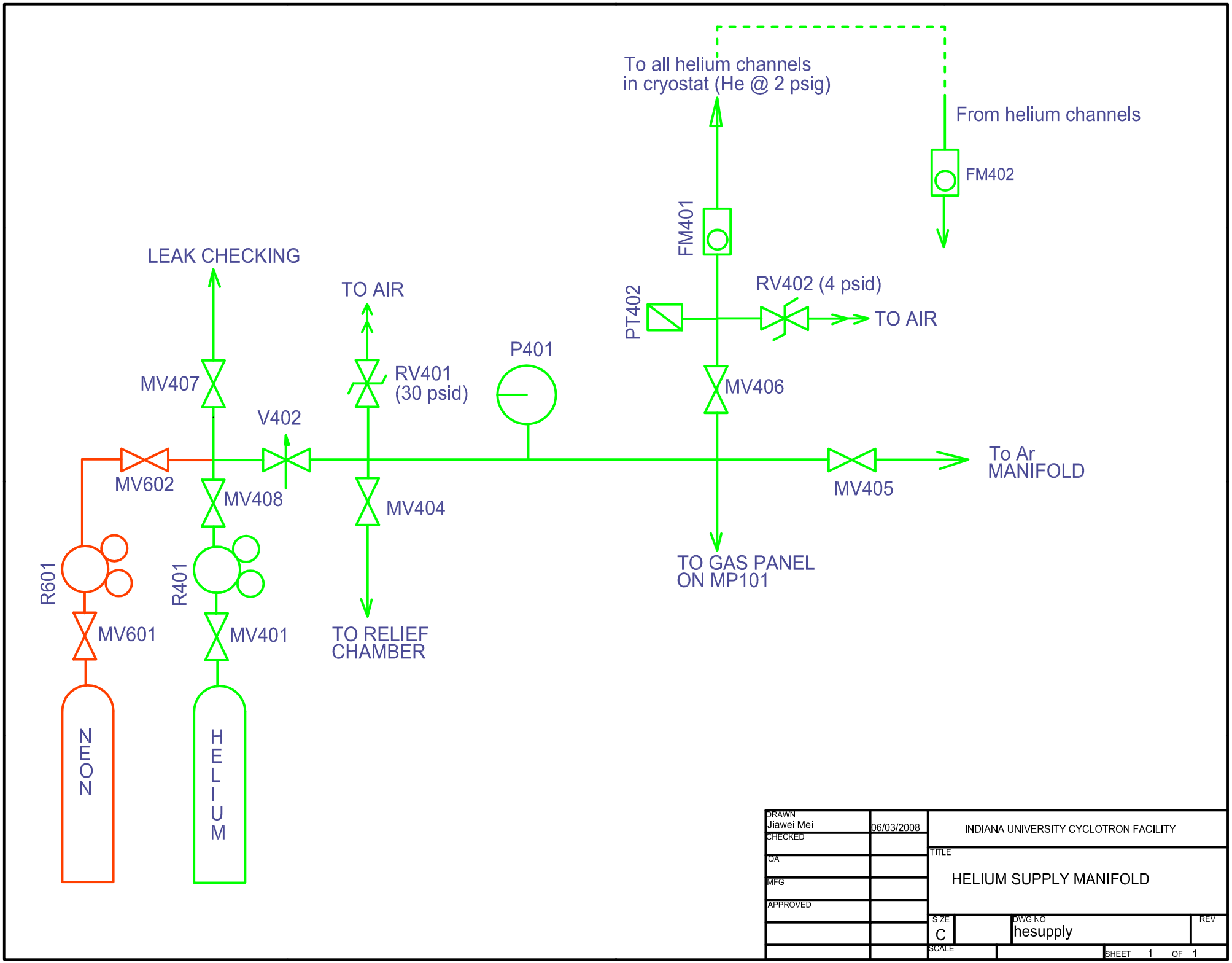
To all helium channels
in cryostat (He @ 2 psig)
From helium channels
FM402
FM401
LEAK CHECKING
TO AIR
PT402
RV402 (4 psid)
TO AIR
P401
MV407
RV401
(30 psid)
MV406
V402
To Ar
MANIFOLD
MV602
MV408
MV404
MV405
R601
R401
TO GAS PANEL
ON MP101
MV601
MV401
TO RELIEF
CHAMBER
NEON
HELIUM
DRAWN
Jiawei Mei
06/03/2008
CHECKED
QA
MFG
APPROVED
INDIANA UNIVERSITY CYCLOTRON FACILITY
TITLE
HELIUM SUPPLY MANIFOLD
SIZE
C
DWG NO
hesupply
REV
SCALE
SHEET 1 OF 1