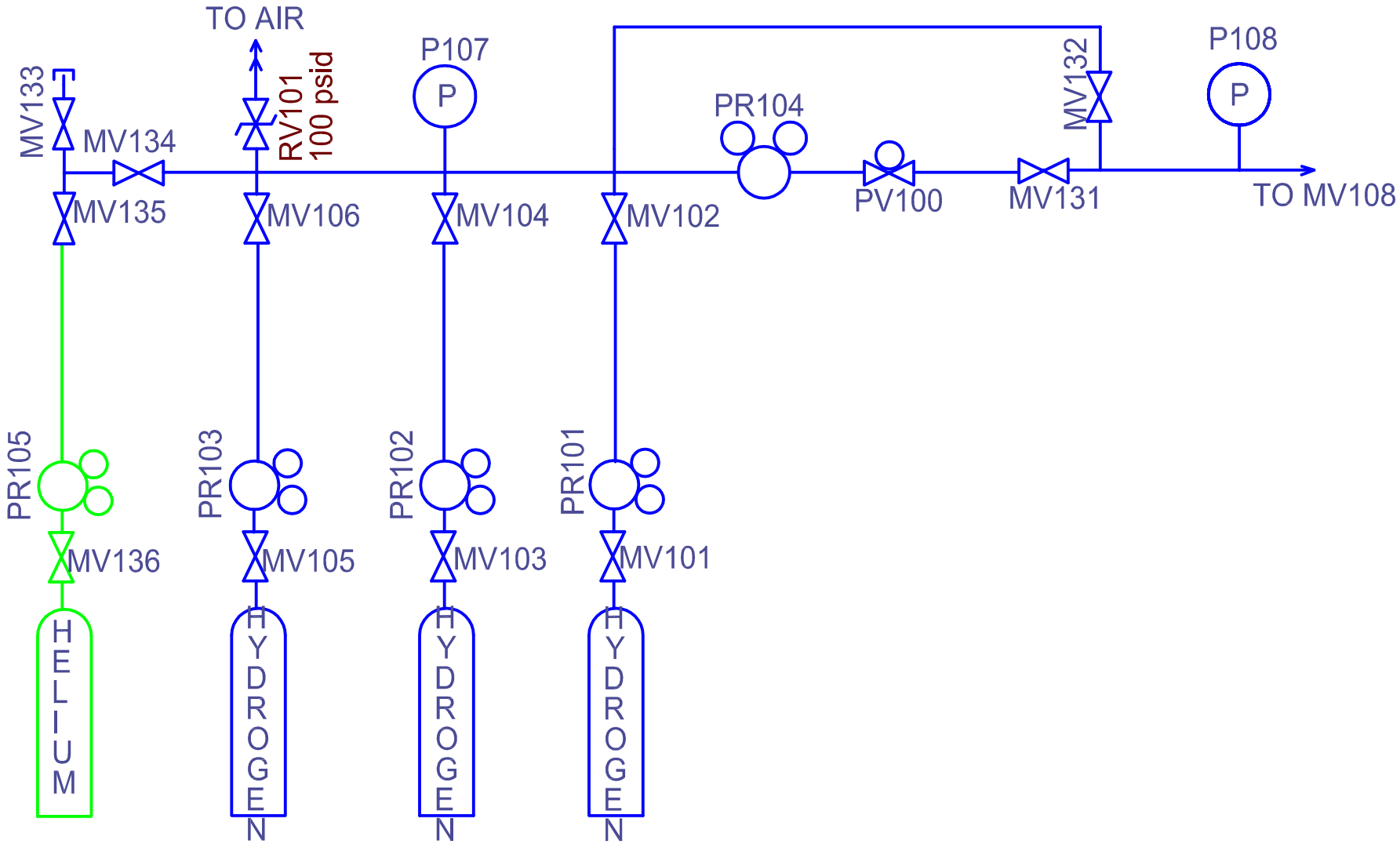

DRAWN JIAWEI MEI	06/03/2008	INDIANA UNIVERSITY CYCLOTRON FACILITY
CHECKED		TITLE
QA		H2 SUPPLY MANIFOLD FOR HYDROGEN TARGET BL13
MFG		
APPROVED		SIZE C / DWG NO h2supply / REV
		SCALE / SHEET 1 OF 1