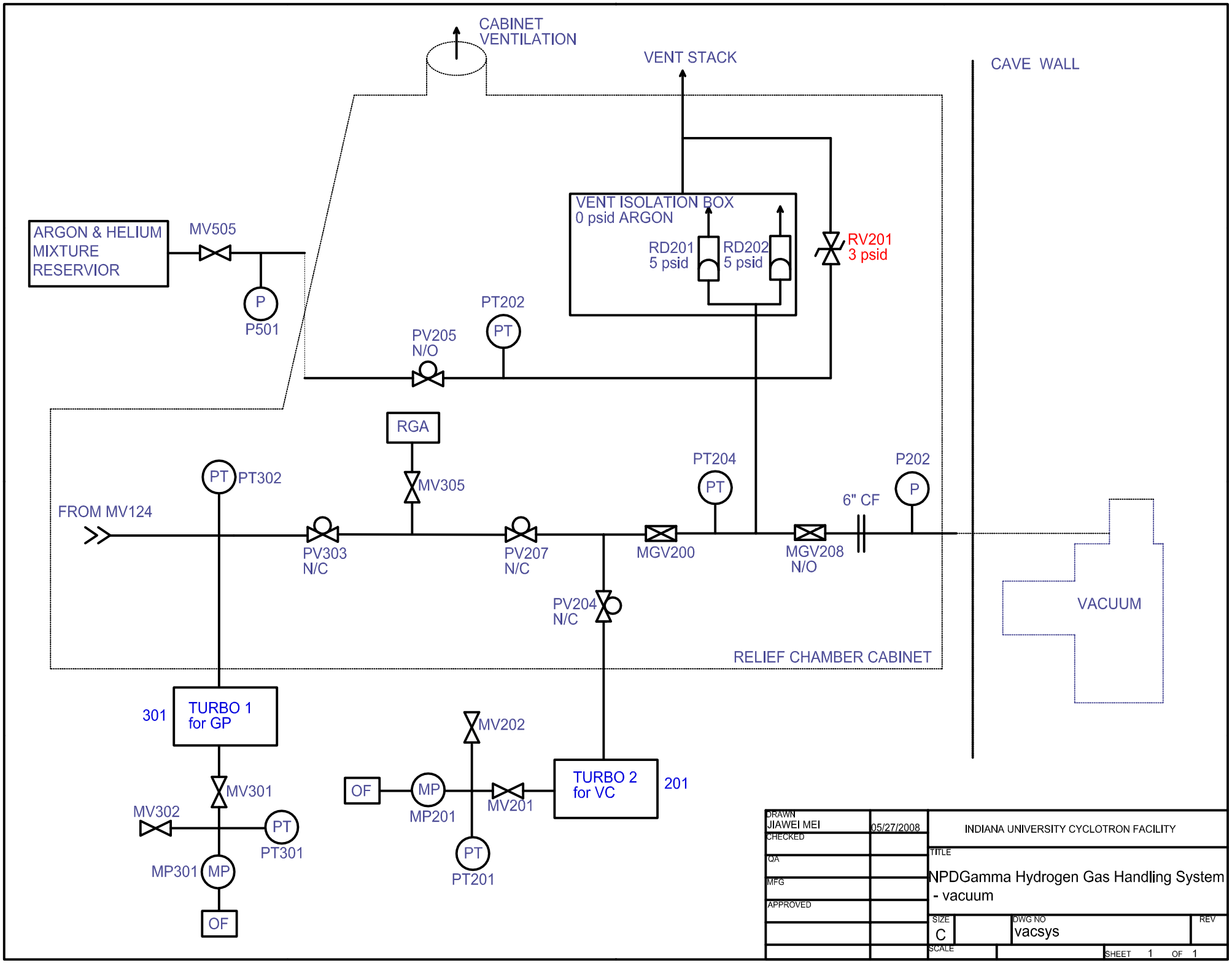
CABINET VENTILATION
VENT STACK
CAVE WALL
VENT ISOLATION BOX
0 psid ARGON
RD201
5 psid
RD202
5 psid
RV201
3 psid
ARGON & HELIUM MIXTURE RESERVIOR
MV505
P
P501
PT202
PT
PV205
N/O
RGA
MV305
PT
PT302
FROM MV124
PV303
N/C
PV207
N/C
PT204
PT
MGV200
MGV208
N/O
6" CF
P202
P
PV204
N/C
VACUUM
RELIEF CHAMBER CABINET
301
TURBO 1
for GP
MV301
MV302
PT
PT301
MP301
MP
OF
MV202
OF
MP
MP201
MV201
TURBO 2
for VC
201
PT
PT201
DRAWN
JIAWEI MEI
05/27/2008
CHECKED
QA
MFG
APPROVED
INDIANA UNIVERSITY CYCLOTRON FACILITY
TITLE
NPDGamma Hydrogen Gas Handling System - vacuum
SIZE
C
DWG NO
vacsys
REV
SCALE
SHEET 1 OF 1