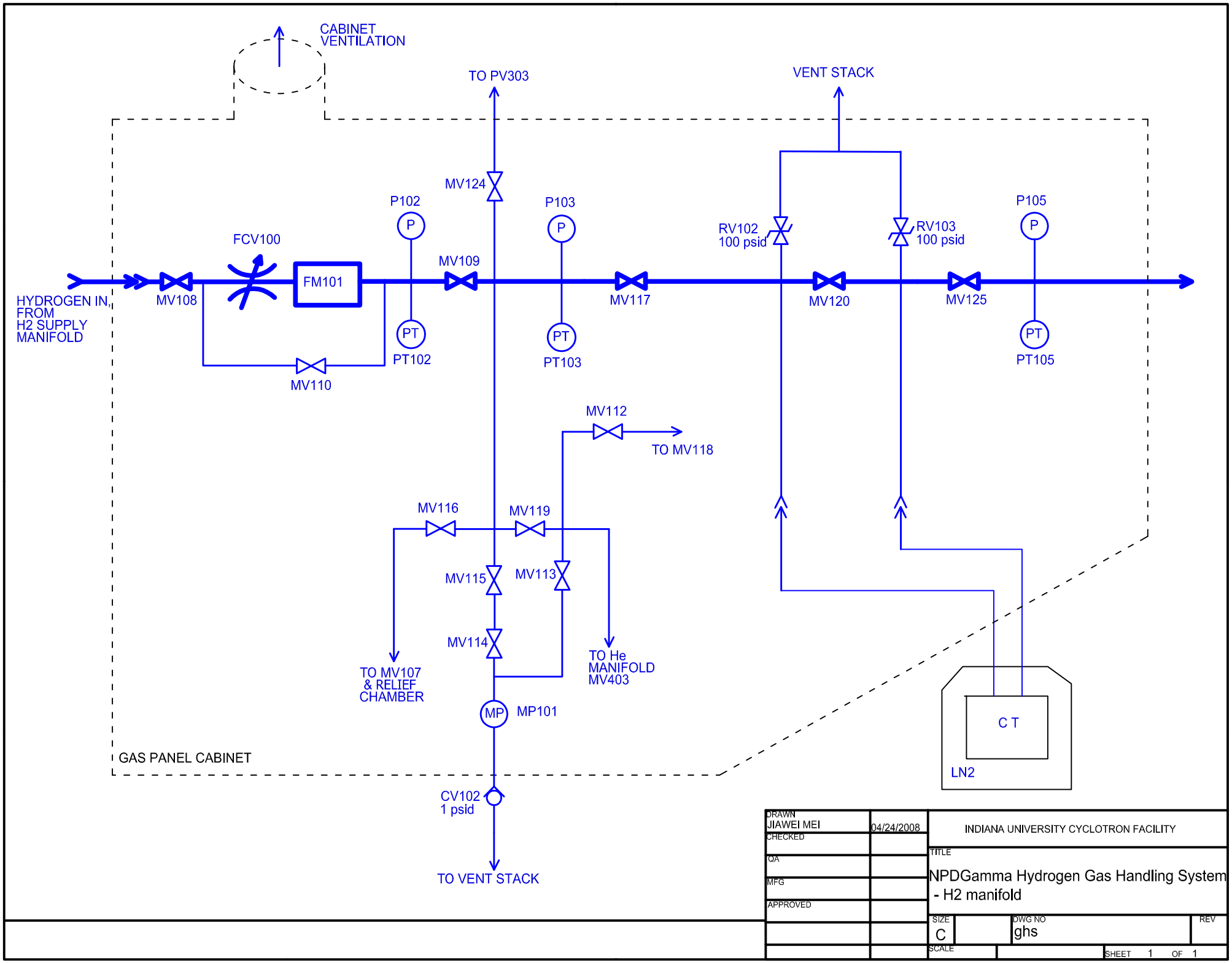
CABINET VENTILATION
TO PV303
VENT STACK
MV124
P102
P103
P105
FCV100
RV102 100 psid
RV103 100 psid
MV109
FM101
HYDROGEN IN, FROM H2 SUPPLY MANIFOLD
MV108
MV117
MV120
MV125
PT102
PT103
PT105
MV110
MV112
TO MV118
MV116
MV119
MV115
MV113
MV114
TO MV107 & RELIEF CHAMBER
TO He MANIFOLD MV403
MP101
C T
LN2
GAS PANEL CABINET
CV102 1 psid
TO VENT STACK
DRAWN JIAWEI MEI 04/24/2008
CHECKED
QA
MFG
APPROVED
INDIANA UNIVERSITY CYCLOTRON FACILITY
TITLE
NPDGamma Hydrogen Gas Handling System - H2 manifold
SIZE C
DWG NO ghs
REV
SCALE
SHEET 1 OF 1