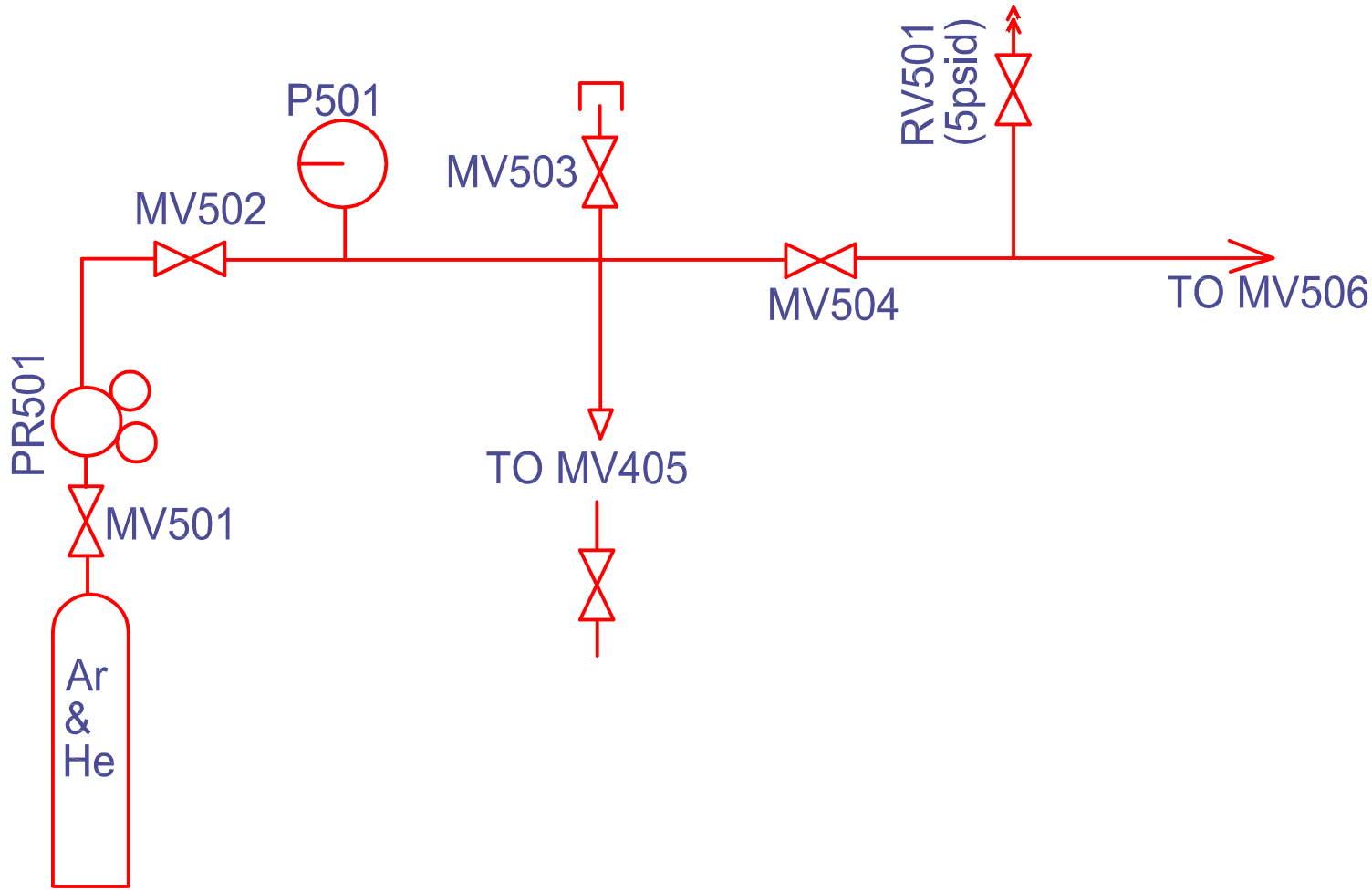

DRAWN Jiawei Mei	06/04/2008	INDIANA UNIVERSITY CYCLOTRON FACILITY
CHECKED		TITLE
QA		HELIUM / ARGON MANIFOLD
MFG		
APPROVED		SIZE C / DWG NO arsupply / REV
		SCALE / SHEET 1 OF 1