The NPDGamma Liquid Hydrogen Target User's Guide

Version 1.12

September 4, 2006

Table of Contents

Revisions Log 2
Introduction 3

About Gas Handling Procedures 5
A. Evacuation and filling the relief chamber buffer volume with neon 8
B. Evacuation and flushing of the target and filling lines with hydrogen 11
C. Filling and cooling the target with hydrogen 16
D. Warming the hydrogen-filled target to room temperature 20
E. Purging hydrogen from the target cell and filling the lines with helium 23
F. Replacing depleted hydrogen bottles 27
G. Handling of helium Dewar and tarnsfer line 31

List of Components and their parameters 32

The NPDGamma Liquid Hydrogen Target User's Guide Revision Log

The NPDGamma Liquid Hydrogen Target responsible person has a lead responsibility for initiating and coordinating reviews and updates to these operating procedures like:
Minor administrative, organizational, and grammatical changes, and error corrections etc. identified through a use of the procedures will be incorporated into the Usr's Guide by the Target responsible person. A summary of changes and revisions will be documented in the Revision Log below.

Baseline changes or other major changes. If a baseline given in this document of the User's Guide has been changed then the new procedure has to be approved as described in IWD# P-25-IWD-06-47.0 (JHA ID # 00 04962) "Operation of the NPDGamma Liquid Hydrogen Target in 1FP12".

Version Signed by	Date	Description of changes	Pages changed
1.00 S.Corvig	June 12, 2006	Originated	None
1.10 S.Penttila	August 1, 2006	Update for 1FP12	n/a
1.11 S.Penttila	August 12, 2006	Updates after cooldowns	several
1.12 S.Penttila	September 02, 2006	More updates	several

The NPDGamma Liquid Hydrogen Target System

Introduction

The NPDGamma Liquid Hydrogen (LH2) Target system consists of 16 liters of liquid hydrogen in the target vessel, a gas panel, pumping stations, relief and vent paths, connecting plumbing, supply gas manifolds for hydrogen, helium and argon, and associated instrumentation. Central to the target system is a gas handling panel with valves providing interconnections among the target vessel, hydrogen and helium gas manifolds. By properly operating the valves, a Target Operator can purge air from the target and connecting lines, fill the target with hydrogen for cooldown, dispose of hydrogen while the target warms up, and if needed, put the target in stand-by mode for extended periods of time with helium gas. Also in the case of an emergency the gas hamdling system can empty the target vessel fast by either spoiling the cryostat vacuum or by a safe relief of the target outside of ER2.

As a hydrogen safety precaution the gas panel itself will be enclosed by a cabinet with its own vent line to the outside of ER2. This prevents leaking hydrogen from the gas panel to enter ER2 in the event of case that a leak does open on the gas panel while hydrogen is present. The cabinet is instrumented with two hydrogen detectors which are connected to the Target Alarm and Warning system. For the NPDGamma LH2 Target the relief and vent paths are external to the gas panel. The supply hydrogen manifold is locacted outside of ER2 in open air but is covered by a roof.

When the target is in steady-state operation, liquid hydrogen is at a temperature of 17 K but the hydrogen pressure in the exhaust line is maintained above 15 psia (776 Torr), which is comfortably above the Los Alamos atmospheric pressure of 11.2 psia (580 Torr).

The NPDGamma target resonsible person has a responsibility for initiating and coordinating reviews and updates to the operating procedures. He is also responsible for making approved changes to this document, documenting a summary of changes and revisions to the Revision Log of the document, and taking care that the latest version of the document is used.

The operational safety description of the LH2 target system is defined in the Integrated Work Document (IWD) IWD# P-25-IWD-06-47.0 (JHA ID# 0004962) "Operation of the NPDGamma Liquid Hydrogen Target in 1FP12". This IDW identifies work steps and potential hazards, it identifies workers and their responsibilities, including Target Operator.

Figure 1 shows a schematic of the gas handling system. Components are labeled by abbreviations as follows:

CV	Check valve
GV	Gate valve
MV	Manually operated valve
FCV	Flow control valve
FM	Flow meter
FR	Flow restrictor
P	Pressure transducer or gage
PT	Pressure transmitter
PV	Pneumatically operated valve
R	Regulator
RD	Rupture disc
RV	Relief valve
RGA	Residual gas analyzer
MP	Mechanical vacuum pump
OPC	Ortho-para hydrogen converter
CT	Cold trap

About Gas Handling Procedures

The manual valves (MV) on the gas panel are quarter turn valves with color-coded handles to indicate their function: those with a red handle carry hydrogen, those with green carry helium. There are also the numeric distinctions: the 100s carry hydrogen, the 200s carry the vacuum chamber and turbo station 2, the 300s carry the turbo station 1 and RGA, and the 400s carry the helium manifold.

When the instructions refer to closing a regulator it means backing out (counterclockwise) the regulator output setting to minimum pressure. Similarly, an instruction to open a regulator without a specification of output pressure means to turn the regulator output setting handle a few turns clockwise. This is only done to aid in evacuating the gas lines all the way back to the bottle valves.

The target system is described in detail in the "NPDGAMMA Liquid Hydrogen Target Engineering Document" (check the target web page www.iucf.indiana.edu/U/lh2target/export-files/ for the latest version). According to this document the target cell can withstand outside pressures of up to 44 psia at room temperature. It is strongly recommended for cool down to have an initial vacuum in the vacuum chamber better than 10^{-4} Torr.

The first step in operating the target (procedure A) is the removal of all air from the target buffer volumes and associated connecting lines. Then fill the buffer volumes with helium or the relief chamber with neon. This will create and extra barrier between air and hydrogen gas.

Second, air has to be removed from the target, and associated plumbing. To do this, the entire system is repeatedly evacuated and backfilled with pure gas. The first backfill of any part of the system is with helium to reduce the possibility of mixing air and hydrogen. Subsequent backfills of the target cell should be hydrogen. The procedure for purging the target cell is given in procedure B.

The target may be filled and cooled after it has been evacuated and flushed. This procedure is described in procedure C. Hydrogen from the supply manifold condenses in the target during a cool down. When the target cell is full of liquid hydrogen and pressurized to 15 psia the gas panel is valved off from both the hydrogen supply and the target cell. The target temperature will be maintained by two cryocoolers and the target cell will only be connected to the relief path. For the NPDGamma LH2 target there is a negligible heat load associated with the neutron beam. The only major sources of heat to the target come from the radiative exchange with the environment and conductive heat along cryostat structures and along the hydrogen gas in the exhaust line.

Emergency Operation

In the event of a power failure, vacuum failure, refrigeration failure, or other corresponding failure the liquid hydrogen could evaporate and create a potentially hazardous hydrogen pressure in the target. To prevent this, relief valve RV104 provides a path to the venting system. It opens at a pressure of 20 psid (2.2 bar in gauge). As a last line of defense, rupture disc RD101 would burst at a pressure of 29 psid (2.7 bar in gauge). These parallel relief paths will vent the target cell against 2 psid of room temperature Neon gas in a relief chamber connected to the vent stack through check valve CV101, which vents outside of ER2 to air.

Respect to the safety, an important valve is PV205 which controls the dump tank containing mixture of Ar and He gas. If one of the four hydrogen monitors detect hydrogen either in cave or in the gas panel cabinet, the PV205 will open and spoil the vacuum causing a rapid boil off of the liquid hydrogen target. PV205 can be also opened by the panic button, see the diagram of the Target Alarm and Warning system, the latest version dated on August 14, 2006. PV205 is normally open valve and therefore requires electrical power to stay closed. The Target Alarm and Warning system is UPS backed, the UPS is able to power the valve for about 30 min and then PV205 will open. Lost of air pressure in the valve control will lead opening of PV205.

During operation the valves MGV128 and MGV208 are locked open. The keys are kept in the FP12 key box.

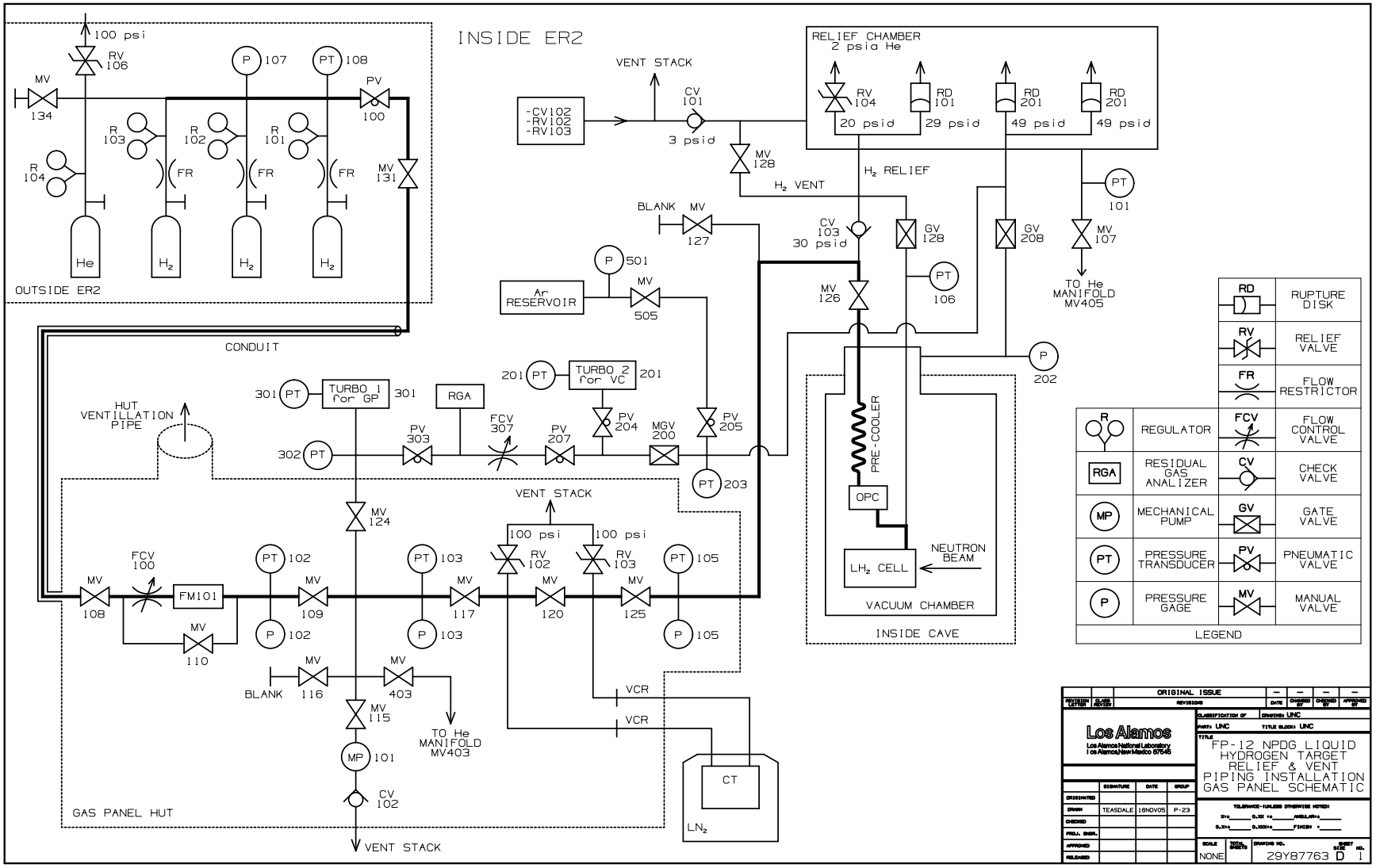
INSIDE ER2
OUTSIDE ER2
100 psi
RV 106
MV 134
P 107
PT 108
PV 100
R 103
R 102
R 101
R 104
FR
MV 131
He
H2
CONDUIT
VENT STACK
-CV102
-RV102
-RV103
CV 101
3 psid
MV 128
H2 VENT
RELIEF CHAMBER
2 psia He
RV 104
20 psid
RD 101
29 psid
RD 201
49 psid
RD 201
49 psid
H2 RELIEF
PT 101
MV 107
TO He MANIFOLD MV405
BLANK
MV 127
CV 103
30 psid
GV 128
GV 208
MV 126
PT 106
P 501
Ar RESERVOIR
MV 505
P 202
201 PT
TURBO 2 for VC
201
301 PT
TURBO 1 for GP
301
RGA
HUT VENTILLATION PIPE
302 PT
PV 303
FCV 307
PV 207
PV 204
MGV 200
PV 205
PT 203
PRE-COOLER
OPC
LH2 CELL
NEUTRON BEAM
VACUUM CHAMBER
INSIDE CAVE
MV 124
VENT STACK
100 psi
100 psi
RV 102
RV 103
PT 105
FCV 100
MV 108
FM101
PT 102
MV 109
PT 103
MV 117
MV 120
MV 125
MV 110
P 102
P 103
P 105
BLANK
MV 116
MV 403
MV 115
TO He MANIFOLD MV403
VCR
VCR
MP 101
CV 102
CT
LN2
GAS PANEL HUT
VENT STACK
RD RUPTURE DISK
RV RELIEF VALVE
FR FLOW RESTRICTOR
R REGULATOR
FCV FLOW CONTROL VALVE
RGA RESIDUAL GAS ANALIZER
CV CHECK VALVE
MP MECHANICAL PUMP
GV GATE VALVE
PT PRESSURE TRANSDUCER
PV PNEUMATIC VALVE
P PRESSURE GAGE
MV MANUAL VALVE
LEGEND
ORIGINAL ISSUE
Los Alamos
Los Alamos National Laboratory
Los Alamos New Mexico 87545
FP-12 NPDG LIQUID HYDROGEN TARGET RELIEF & VENT PIPING INSTALLATION GAS PANEL SCHEMATIC
TEASDALE 16NOV05 P-23
NONE
29Y87763 D 1

A1. Evacuation and filling the relief chamber buffer volume with neon

Initial state of system:

☐	MV102	closed	☐	PV205	closed
☐	MV104	closed	☐	PV207	open
☐	MV106	closed	☐	PV303	closed
☐	MV107	closed	☐	MGV200	open
☐	MV108	closed	☐	MGV128	locked open
☐	MV109	closed	☐	MGV208	locked open
☐	MV110	closed	☐	P107	not in use
☐	MV113	closed	☐	P108	not in use
☐	MV114	closed	☐	P102	not in use
☐	MV115	closed	☐	P103	not in use
☐	MV116	closed	☐	P105	not in use
☐	MV117	closed	☐	P202	not in use
☐	MV119	closed	☐	P501	5-10 psi
☐	MV120	closed	☐	Hydrogen bottles	closed
☐	MV124	closed	☐	R101	closed
☐	MV125	closed	☐	R102	closed
☐	MV126	closed	☐	R103	closed
☐	MV127	closed	☐	R106	closed
☐	MV128	closed	☐	Helium bottle	closed
☐	MV129	closed	☐	R104	closed
☐	MV131	closed	☐	MP101	not in use
☐	MV132	closed	☐	Turbo 201	in use
☐	MV133	closed	☐	Turbo 301	not in use
☐	MV134	closed	☐	PT101	not in use
☐	MV135	closed	☐	PT102	not in use
☐	MV201	open	☐	PT103	not in use
☐	MV202	closed	☐	PT105	not in use
☐	MV301	closed	☐	PT106	not in use
☐	MV302	closed	☐	PT201	0.00 bar
☐	MV305	open	☐	PT202	0.00 bar
☐	PV100	closed	☐	PT204	$< 10^{-4}$ Torr
☐	MV505	open	☐	PT301	not in use
☐	FCV100	closed	☐	PT302	not in use
☐	PV204	open	☐	RGA	in use on IVC

Name: _____ Date: _____

A2. Procedure: Evacuation and filling the relief chamber buffer volume with neon
This procedure needs to be performed before a target cool down or if hydrogen gas is in the relief chamber.

- ☐ 1. Confirm that all initial conditions for procedure A are met.
- ☐ 2. Turn on mechanical pump MP101.
- ☐ 3. Open valves MV107, MV116, and MV114.
- ☐ 4. Open valve MV115 to MP101. Gauge PT101 will start to indicate vacuum, continue pumping till pressure is less than 0.01 bar at PT101.
- ☐ 5. Close valve MV116.
- ☐ 6. Check that the regulator on the neon cylinder is closed. On Helium panel close MV403, MV404, MV405, MV407, and MV408. Check that MV602 is open.
- ☐ 7. Open valve MV119 and pump till pressure in P103 and P401 indicate vacuum.
- ☐ 8. Close MV119 and open the neon regulator so that in the lines have a small positive pressure. Close the regulator.
- ☐ 9. Open valve MV119 and pump till pressure in P103 and P401 indicate vacuum. Close MV115 and MV119.
- ☐ 10. Open the neon regulator so that in the lines have a small positive pressure.
- ☐ 11. Open MV116 and slowly open MV119 to let neon into the relief chamber. When PT101 indicates 0.7 bar close MV119.
- ☐ 12. Open MV115 and pump the chamber till pressure is less than 0.01 bar. Close MV115.
- ☐ 13. Open MV119 slowly and fill the chamber till PT101 indictes 0.78-0.79 bar. Close MV119, MV116, and MV107.
- ☐ 14. On the helium panel close MV602. On the neon cylinder close the regulator and main cylinder valve.
- ☐ 15. Close MV114 and stop MP101 and vent throuh MV113.
- ☐ 16. Check that all final conditions for Procedure A are met.

Name: _____ Date: _____

A3. Evacuation and filling the relief chamber buffer volume with neon

Final state of system:

- ☐ MV102 ..... closed
- ☐ MV104 ..... closed
- ☐ MV106 ..... closed
- ☐ MV107 ..... closed
- ☐ MV108 ..... closed
- ☐ MV109 ..... closed
- ☐ MV110 ..... closed
- ☐ MV113 ..... closed
- ☐ MV114 ..... closed
- ☐ MV115 ..... closed
- ☐ MV116 ..... closed
- ☐ MV117 ..... closed
- ☐ MV119 ..... closed
- ☐ MV120 ..... closed
- ☐ MV124 ..... closed
- ☐ MV125 ..... closed
- ☐ MV126 ..... closed
- ☐ MV127 ..... closed
- ☐ MV128 ..... closed
- ☐ MV129 ..... closed
- ☐ MV131 ..... closed
- ☐ MV132 ..... closed
- ☐ MV133 ..... closed
- ☐ MV134 ..... closed
- ☐ MV135 ..... closed
- ☐ MV201 ..... open
- ☐ MV202 ..... closed
- ☐ MV301 ..... closed
- ☐ MV302 ..... closed
- ☐ MV305 ..... open
- ☐ PV100 ..... closed
- ☐ MV505 ..... open
- ☐ FCV100 ..... closed
- ☐ PV204 ..... open
- ☐ PV205 ..... closed
- ☐ PV207 ..... open
- ☐ PV303 ..... closed
- ☐ MGV200 ..... open
- ☐ MGV128 ..... locked open
- ☐ MGV208 ..... locked open
- ☐ P107 ..... not in use
- ☐ P108 ..... not in use
- ☐ P102 ..... not in use
- ☐ P103 ..... not in use
- ☐ P105 ..... not in use
- ☐ P202 ..... not in use
- ☐ P501 ..... 5-10 psig
- ☐ Hydrogen bottles ..... closed
- ☐ R101 ..... closed
- ☐ R102 ..... closed
- ☐ R103 ..... closed
- ☐ R106 ..... closed
- ☐ Helium bottle ..... closed
- ☐ R104 ..... closed
- ☐ MP101 ..... not in use
- ☐ Turbo 201 ..... not in use
- ☐ Turbo 301 ..... runing
- ☐ PT101 ..... 0.7-0.8 bar
- ☐ PT102 ..... not in use
- ☐ PT102 ..... not in use
- ☐ PT103 ..... not in use
- ☐ PT105 ..... not in use
- ☐ PT106 ..... not in use
- ☐ PT201 ..... 0.00 bar
- ☐ PT202 ..... 0.000 bar
- ☐ PT204 ..... $< 10^{-4}$ Torr
- ☐ PT301 ..... not in use
- ☐ PT302 ..... not in use
- ☐ RGA ..... in use on IVC

Name: _____ Date: _____

B1. Evacuation and flushing of the target and filling lines with hydrogen

Initial state of system:

☐	MV102	closed	☐	PV205	closed
☐	MV104	closed	☐	PV207	open
☐	MV106	closed	☐	PV303	closed
☐	MV107	closed	☐	MGV200	open
☐	MV108	closed	☐	MGV128	locked open
☐	MV109	closed	☐	MGV208	locked open
☐	MV110	closed	☐	P107	not in use
☐	MV113	closed	☐	P108	not in use
☐	MV114	closed	☐	P102	not in use
☐	MV115	closed	☐	P103	not in use
☐	MV116	closed	☐	P105	not in use
☐	MV117	closd	☐	P202	0.00 bar
☐	MV119	closed	☐	P501	5-10 psig
☐	MV120	closed	☐	Hydrogen bottles	closed
☐	MV124	closed	☐	R101	closed
☐	MV125	closed	☐	R102	closed
☐	MV126	closed	☐	R103	closed
☐	MV127	closed	☐	R106	closed
☐	MV128	closed	☐	Helium bottle	closed
☐	MV129	closed	☐	R104	closed
☐	MV131	closed	☐	MP101	not in use
☐	MV132	closed	☐	Turbo 201	in use
☐	MV133	closed	☐	Turbo 301	not in use
☐	MV134	closed	☐	PT101	0.7-0.8 bar
☐	MV135	closed	☐	PT102	not in use
☐	MV201	open	☐	PT103	not in use
☐	MV202	closed	☐	PT105	not in use
☐	MV301	open	☐	PT106	not in use
☐	MV302	closed	☐	PT201	0.00 bar
☐	MV305	open	☐	PT202	0.000 bar
☐	PV100	closed	☐	PT204	$< 10^{-4}$ Torr
☐	MV505	open	☐	PT301	not in use
☐	FCV100	closed	☐	PT302	not in use
☐	PV204	open	☐	RGA	in use on IVC

Name: _____ Date: _____

B2. Procedure: Evacuation and flushing of the target and filling lines with hydrogen

☐ 1. Confirm that all initial conditions for procedure B are met. They are same as the final conditions for procedure A.

☐ 2. Turn on pump MP101.

☐ 3. Open valves MV108, MV109, MV110, MV117, MV120, MV125, and FCV100.

☐ 4. Open valve MV114 and MV115. Gauge P102 will drop from 0 psig to 30 in.Hg.

☐ 5. Make sure that hydrogen bottles and helium bottle are closed. Open PV100 and valves R106, MV131, MV132, MV134, MV135, MV102, MV104, and MV106.

☐ 6. Gradually open helium regulator R104 by turning its handle fully clockwise.

☐ 7. Gradually open hydrogen regulators R101, R102 and R103 by turning their handles fully clockwise. Wait until PT102 reaches less than 0.01 bar.

First evacuation of target cell:

☐ 8. Gradually open valve MV126 and MV129 to evacuate the target cell and connecting lines. Gauges P107, P102, P103 and P105 will go from 0 to 30 in. Hg and PT106 should less than 0.003 bar.

☐ 9. Turn on Turbo 301. Remember to open MV301.

☐ 10. Wait until PT302 reaches below $< 10^{-4}$ Torr.

☐ 11. Close valve MV115 and open valve MV124, and wait until PT302 reaches 10^{-5} Torr range.

☐ 12. Close PV207 and open valve PV303, and monitor target cell content with the RGA. Save the data after running a minute or so and then close valve PV303 and open valve PV207 to monitor the content of vacuum.

☐ 13. Sequentially close and reopen valves MV131, MV132, MV134, MV135, MV102, MV104, MV108, MV110, MV109, MV117, MV120, MV124, MV125, MV126 and MV129 to pump out small dead volumes in the valves.

☐ 14. Close valves MV108, MV117, and MV124.

☐ 15. Close helium regulator R104 by turning its handle fully counterclockwise.

☐ 16. Open the helium bottle valve and adjust the regulator R104 to 0 psig.

Backfilling of target cell with helium:

☐ 17. Cool down the cold trap by filling it with LN2.

☐ 18. Open MV108 and gradually open valve MV117 to fill the target with helium.

☐ 19. Close regulator R104 when gauge PT105 and PT106 indicates about 0.77 bar and close the helium bottle.

Second evacuation of target cell:

☐ 20. Gradually open valve MV115 to pump out the target cell and connecting lines.

☐ 21. Continue pumping on the target cell and lines until PT102 and PT106 reachs less than 0.003 bar.

☐ 22. Close MV115 and open MV124.

☐ 23. When PT302 reaches 10^{-5} Torr repeat step 12 above: Close PV207 and open valve PV303, and monitor target cell content with the RGA. Save the data after running a minute or so and then close valve PV303 and open valve PV207 to monitor the content of vacuum.

☐ 24. Close valve MV124.

☐ 25. Close hydrogen regulators R101, R102 and R103 by turning their handles fully counterclockwise and close valve MV108.

☐ 26. Open all the hydrogen bottles valves and adjust regulator R101 to 0 psig. Close hydrogen bottles 2 and 3.

First backfilling of target cell with hydrogen:

☐ 27. Gradually open valve MV108 to fill the target cell with hydrogen.

☐ 28. When gauge PT106 to reaches 0.77 bar, close valve MV108.

Third evacuation of target cell:

☐ 29. Gradually open valve MV115 to pump out the target cell and lines.

☐ 30. Continue pumping on the target cell and lines until PT106 less than 0.003 bar.

☐ 31. Close valve MV115 and open valve MV124.

☐ 32. When PT302 reaches 10^{-5} Torr repeat step 12.above. Close PV207 and open valve PV303, and monitor target cell content with the RGA. Save the data after running a minute or so and then close valve PV303 and open valve PV207 to monitor the content of vacuum.

☐ 33. Close valve MV124.

Second backfilling of target cell with hydrogen:

☐ 34. Gradually open valve MV108 to fill the target cell with hydrogen. Gauges PT106 will go to about 0.77 bar.

☐ 35. Close valve MV108 when gauge PT106 reaches 0.77 bar.

Fourth evacuation of target cell:

☐ 36. Gradually open valve MV115 to pump out the target cell and lines.

☐ 37. Continue pumping on the target cell and lines until PT106 reaches less than 0.003 bar.

☐ 38. Close valve MV114 and MV115 and open valve MV124.

☐ 39. When PT302 reaches 10^{-5} Torr repeat step 12.above. Close PV207 and open valve PV303, and monitor target cell content with the RGA. Save the data after running a minute or so and then close valve PV303 and open valve PV207 to monitor the content of vacuum. Close MV124, and PV303 and open PV207.

Third and final backfilling of target cell with hydrogen:

☐ 40. Close valve MV129.

☐ 41. Gradually open valve MV108 to fill the target cell with hydrogen. Gauges PT106 has to reach 0.9 bar.

☐ 42. Turn off pump MP101 and vent it.

☐ 43. Confirm that all final conditions for procedure B are met.

Name: _____ Date: _____

B3. Evacuation and flushing of the target and filling lines with hydrogen

Final state of system:

- ☐ MV102 ..... closed
- ☐ MV104 ..... closed
- ☐ MV106 ..... closed
- ☐ MV107 ..... closed
- ☐ MV108 ..... open
- ☐ MV109 ..... open
- ☐ MV110 ..... open
- ☐ MV113 ..... closed
- ☐ MV114 ..... closed
- ☐ MV115 ..... closed
- ☐ MV116 ..... closed
- ☐ MV117 ..... open
- ☐ MV119 ..... closed
- ☐ MV120 ..... open
- ☐ MV124 ..... closed
- ☐ MV125 ..... open
- ☐ MV126 ..... open
- ☐ MV127 ..... closed
- ☐ MV128 ..... closed
- ☐ MV129 ..... closed
- ☐ MV131 ..... open
- ☐ MV132 ..... closed
- ☐ MV133 ..... closed
- ☐ MV134 ..... closed
- ☐ MV135 ..... closed
- ☐ MV201 ..... open
- ☐ MV202 ..... closed
- ☐ MV301 ..... open
- ☐ MV302 ..... closed
- ☐ MV305 ..... open
- ☐ PV100 ..... open
- ☐ MV505 ..... open
- ☐ FCV100 ..... fully open

- ☐ PV204 ..... open
- ☐ PV205 ..... closed
- ☐ PV207 ..... open
- ☐ PV303 ..... closed
- ☐ MGV200 ..... open
- ☐ MGV128 ..... locked open
- ☐ MGV208 ..... locked open
- ☐ P107 ..... 0 psig
- ☐ P108 ..... 0 psig
- ☐ P102 ..... 0 psig
- ☐ P103 ..... 0 psig
- ☐ P105 ..... 0 psig
- ☐ P202 ..... 0.00 bar
- ☐ P501 ..... 5-10 psig
- ☐ Hydrogen bottles ..... one open
- ☐ R101 ..... open
- ☐ R102 ..... closed
- ☐ R103 ..... closed
- ☐ R106 ..... closed
- ☐ Helium bottle ..... closed
- ☐ R104 ..... closed
- ☐ MP101 ..... not in use
- ☐ Turbo 201 ..... in use
- ☐ Turbo 301 ..... in use
- ☐ PT101 ..... 0.7-0.8 bar
- ☐ PT102 ..... not in use
- ☐ PT103 ..... not in use
- ☐ PT105 ..... not in use
- ☐ PT106 ..... 0.9 bar
- ☐ PT201 ..... 0.00 bar
- ☐ PT202 ..... 0.00 bar
- ☐ PT204 ..... $< 10^{-4}$ Torr
- ☐ PT301 ..... not in use
- ☐ PT302 ..... $< 10^{-5}$ Torr
- ☐ RGA ..... in use on IVC

Name: _____

Date: _____

C1. Filling and cooling the target with hydrogen

Initial state of system:

☐	MV102	open
☐	MV104	closed
☐	MV106	closed
☐	MV107	closed
☐	MV108	open
☐	MV109	open
☐	MV110	open
☐	MV113	closed
☐	MV114	closed
☐	MV115	closed
☐	MV116	closed
☐	MV117	open
☐	MV119	closed
☐	MV120	open
☐	MV124	closed
☐	MV125	open
☐	MV126	open
☐	MV127	closed
☐	MV128	closed
☐	MV129	closed
☐	MV131	open
☐	MV132	closed
☐	MV133	closed
☐	MV134	closed
☐	MV135	closed
☐	MV201	open
☐	MV202	closed
☐	MV301	closed
☐	MV302	closed
☐	MV305	open
☐	PV100	open
☐	MV505	open
☐	FCV100	fully open

☐	PV204	open
☐	PV205	closed
☐	PV207	open
☐	PV303	closed
☐	MGV200	open
☐	MGV128	locked open
☐	MGV208	locked open
☐	P107	0 psig
☐	P108	0 psig
☐	P102	0 psig
☐	P103	0 psig
☐	P105	0 psig
☐	P202	0.0 bar
☐	P501	5-10 psig
☐	Hydrogen bottles	one open
☐	R101	open
☐	R102	closed
☐	R103	closed
☐	R106	closed
☐	Helium bottle	closed
☐	R104	closed
☐	MP101	not in use
☐	Turbo 201	in use
☐	Turbo 301	in use
☐	PT101	0.7-0.8 bar
☐	PT102	positive pressure
☐	PT103	positive pressure
☐	PT105	positive pressure
☐	PT106	0.9 psi
☐	PT201	0.00 bar
☐	PT202	0.000 bar
☐	PT204	$< 10^{-4}$ Torr
☐	PT301	not in use
☐	PT302	$< 10^{-5}$ Torr
☐	RGA	in use on IVC

Name: _____

Date: _____

C2. Procedure: Filling and cooling the target with hydrogen

☐ 1. Perform procedure B before starting with procedure C.

☐ 2. Notify CCR (7-5729) and EAM (Paul Lewis at Lujan Center; 5-0932 or better send email lewis@lanl.gov) that condensation of hydrogen into the target in 1FP12 will be started. Turn on the yellow flashing hydrogen target active light. Check that the target warning and alarm system is active.

☐ 3. Confirm that all initial conditions for procedure C are met, they are the same as the final conditions for procedure B.

☐ 4. The lines are full with hydrogen gas from all the way from the hydrogen supply manifold to the target cell at about 1 atm absolute. Increase regulator R101 to 3 psig.

☐ 5. Close valve MV110. This will force the hydrogen flow to be controlled by FCV100.

☐ 6. Cold trap was cooled in procedure B. Start the cool down process by initiating the precooler procedure and turn on the cryocoolers. If needed regulate the flow to the target cell by closing/opening FCV100. The system should be kept all the time at higher pressure than the ambient pressure of 0.77 bar.

☐ 7. When the high pressure gauge on regulator R101 reaches below 200 psi open hydrogen bottle 2 and set its regulator R102 to about 3 psig. During the filling regulator pressures up to 40 psig can be used.

☐ 8. Close regulator R101 by turning its handle counterclockwise and close the bottle valve on the depleted hydrogen bottle.

☐ 9. Repeat step 7 when needed with hydrogen bottle 3 and its regulator R103.

☐ 10. Repeat step 8 with regulator R102 on the depleted hydrogen bottle.

☐ 11. When gas amounts that corresponds about 16 liter of liquid hydrogen, has been drawn from the bottles, the target cell should be full and the level is in the exhaust line.

☐ 12. Close regulator R103 and its bottle.

☐ 13. Close valve MV126.

☐ 14 Open valve MV110 and open FCV100 all the way.

☐ 15. Start pump MP101 and open valve MV114 and MV115 to pump remaining hydrogen from the gas panel and supply lines.

- ☐ 16. Wait until the pressure on P102 drops below 0.001 bar then close valves MV114, MV115, and MV108.
- ☐ 17. Open the helium bottle on the hydrogen manifold and open its regulator R104 setting the pressure to 3 psig.
- ☐ 18. Gradually open valve MV108 and wait until P105 shows about 0.95 bar.
- ☐ 19. Close the regulator R104 and its bottle.
- ☐ 20. Close valves MV108, MV109, MV117 and PV100. At this stage the gas panel and the hydrogen supply line contain about 3 psig helium all the way to valve MV126.
- ☐ 21. Turn pump MP101 off and vent it.
- ☐ 22. Check that all final conditions are for procedure C are met.

Name: _____ Date: _____

C3. Filling and cooling the target with hydrogen

Finall state of system:

☐	MV102	closed
☐	MV104	closed
☐	MV106	closed
☐	MV107	closed
☐	MV108	closed
☐	MV109	closed
☐	MV110	open
☐	MV113	closed
☐	MV114	closed
☐	MV115	closed
☐	MV116	closed
☐	MV117	closed
☐	MV119	closed
☐	MV120	open
☐	MV124	closed
☐	MV125	open
☐	MV126	closed
☐	MV127	closed
☐	MV128	closed
☐	MV129	closed
☐	MV131	open
☐	MV132	closed
☐	MV133	closed
☐	MV134	closed
☐	MV135	closed
☐	MV201	open
☐	MV202	closed
☐	MV301	open
☐	MV302	closed
☐	MV305	open
☐	MV505	open
☐	PV100	closed
☐	FCV100	fully open

☐	PV204	open
☐	PV205	closed
☐	PV207	open
☐	PV303	closed
☐	MGV200	open
☐	MGV128	locked open
☐	MGV208	locked open
☐	P107	3 psig
☐	P108	3 psig
☐	P102	3 psig
☐	P103	3 psig
☐	P105	3 psig
☐	P202	0.00 bar
☐	P501	5-10 psig
☐	Hydrogen bottles	closed
☐	R101	closed
☐	R102	closed
☐	R103	closed
☐	R106	closed
☐	Helium bottle	closed
☐	R104	closed
☐	MP101	not in use
☐	Turbo 201	in use
☐	Turbo 301	in use
☐	PT101	0.7-0.8 bar
☐	PT102	positive pressure
☐	PT103	positive pressure
☐	PT105	positive pressure
☐	PT106	about 0.9 bar
☐	PT201	0.00 bar
☐	PT202	0.000 bar
☐	PT204	$< 10^{-5}$ Torr
☐	PT301	not in use
☐	PT302	$< 10^{-5}$ Torr
☐	RGA	in use on IVC

Name: _____ Date: _____

D1. Warming the hydrogen-filled target to room temperature

Initial state of system:

☐	MV102	closed
☐	MV104	closed
☐	MV106	closed
☐	MV107	closed
☐	MV108	closed
☐	MV109	closed
☐	MV110	open
☐	MV113	closed
☐	MV110	closed
☐	MV115	closed
☐	MV116	closed
☐	MV117	closed
☐	MV119	closed
☐	MV120	open
☐	MV124	closed
☐	MV125	open
☐	MV126	closed
☐	MV127	closed
☐	MV128	closed
☐	MV129	closed
☐	MV131	open
☐	MV132	closed
☐	MV133	closed
☐	MV134	closed
☐	MV135	closed
☐	MV201	open
☐	MV202	closed
☐	MV301	open
☐	MV302	closed
☐	MV305	open
☐	PV100	closed
☐	MV505	open
☐	FCV100	fully open

☐	PV204	open
☐	PV205	closed
☐	PV207	open
☐	PV303	closed
☐	MGV200	open
☐	MGV128	locked open
☐	MGV208	locked open
☐	P107	3 psig
☐	P108	3 psig
☐	P102	3 psig
☐	P103	3 psig
☐	P105	3 psig
☐	P202	0.00 psig
☐	P501	5-10 psig
☐	Hydrogen bottles	closed
☐	R101	closed
☐	R102	closed
☐	R103	closed
☐	R106	closed
☐	Helium bottle	closed
☐	R104	closed
☐	MP101	not in use
☐	Turbo 201	in use
☐	Turbo 301	in use
☐	PT101	0.7-0.8 bar
☐	PT102	positive pressure
☐	PT103	positive pressure
☐	PT105	positive pressure
☐	PT106	about 0.9 bar
☐	PT201	o.oo bar
☐	PT202	0.000 bar
☐	PT204	$< 10^{-5}$ Torr
☐	PT301	not in use
☐	PT302	$< 10^{-5}$ Torr
☐	RGA	in use on IVC

Name: _____ Date: _____

D2. Procedure: Warming the hydrogen-filled target to room temperature

☐ 1. The target is full of liquid hydrogen at the beginning of procedure D.

☐ 2. Confirm that all initial conditions for procedure D are met, they should be the same as the final conditions for procedure C.

☐ 3. Open valve MV128. This will start venting the target to the vent line through check valves CV104 and CV101.

☐ 4. Stop the cryocoolers that cool the target.

☐ 5. As the liquid hydrogen boils off, monitor the pressure in the target cell on PT106. The normal boil-off of liquid hydrogen should last several hours. Signs that the target has boiled-off all its liquid: the pressure in the hydrogen vessel is about 14 psid (about 3 psid above the Los Alamos normal air pressure, as this is the pressure that opens check valve CV101), all the temperatures measured on the hydrogen vessel are above the hydrogen liquid-vapor curve for that respective pressure.

☐ 6. The boil off rate could be increased by using heaters H1 and H3. The warm-up rate could be also accelerated by introducing argon or helium gas into the isolation vacuum from the helium gas pannel using valves MV119, MV124, PV303, PV207, and MGV200. First, close valve PV204 and then stop turbo 201..

☐ 7. By opening valve MV124, helium gas from the gas panel can be introduced to the vacuum. Be sure that MV305 is closed, it protects RGA.

☐ 8. Once the target is warm enough continue with procedure E. Note that the target, connecting lines, and the relief chamber are still full of hydrogen gas.

Do not leave the target with hydrogen gas inside.

☐ 9. Check that all final conditions for procedure D are met.

Name: _____ Date: _____

D3. Warming the hydrogen-filled target to room temperature; final state of system

Final state:

☐	MV102	closed
☐	MV104	closed
☐	MV106	closed
☐	MV107	closed
☐	MV108	closed
☐	MV109	closed
☐	MV110	open
☐	MV113	closed
☐	MV114	closed
☐	MV115	closed
☐	MV116	closed
☐	MV117	closed
☐	MV119	closed
☐	MV120	open
☐	MV124	closed
☐	MV125	open
☐	MV126	closed
☐	MV127	closed
☐	MV128	closed
☐	MV129	closed
☐	MV131	open
☐	MV132	closed
☐	MV133	closed
☐	MV134	closed
☐	MV135	closed
☐	MV201	open
☐	MV202	closed
☐	MV301	closed
☐	MV302	closed
☐	MV305	open
☐	PV100	closed
☐	MV505	open
☐	FCV100	fully open

☐	PV204	open
☐	PV205	closed
☐	PV207	open
☐	PV303	closed
☐	MGV200	open
☐	MGV128	locked open
☐	MGV208	locked open
☐	P107	3 psig
☐	P108	3 psig
☐	P102	3 psig
☐	P103	3 psig
☐	P105	3 psig
☐	P202	0.00 psig
☐	P501	5-10 psig
☐	Hydrogen bottles	closed
☐	R101	closed
☐	R102	closed
☐	R103	closed
☐	R106	closed
☐	Helium bottle	closed
☐	R104	closed
☐	MP101	not in use
☐	Turbo 201	in use
☐	Turbo 301	not in use
☐	PT101	0.7-0.8 bar
☐	PT102	positive pressure
☐	PT103	positive pressure
☐	PT105	positive pressure
☐	PT106	about 0.9 bar
☐	PT201	0.00 bar
☐	PT202	0.000 bar
☐	PT204	$< 10^{-5}$ Torr
☐	PT301	not in use
☐	PT302	not in use
☐	RGA	in use on IVC

Name: _____ Date: _____

E1. Purging hydrogen from the target cell and filling the lines with helium

Initial state of system:

☐	MV102	closed
☐	MV104	closed
☐	MV106	closed
☐	MV107	closed
☐	MV108	closed
☐	MV109	closed
☐	MV110	open
☐	MV113	closed
☐	MV114	closed
☐	MV115	closed
☐	MV116	closed
☐	MV117	closed
☐	MV119	closed
☐	MV120	open
☐	MV124	closed
☐	MV125	open
☐	MV126	closed
☐	MV127	closed
☐	MV128	closed
☐	MV129	closed
☐	MV131	open
☐	MV132	closed
☐	MV133	closed
☐	MV134	closed
☐	MV135	closed
☐	MV201	open
☐	MV202	closed
☐	MV301	closed
☐	MV302	closed
☐	MV305	open
☐	PV100	closed
☐	MV505	open
☐	FCV100	fully open

☐	PV204	open
☐	PV205	closed
☐	PV207	open
☐	PV303	closed
☐	MGV200	open
☐	MGV128	locked open
☐	MGV208	locked open
☐	P107	3 psig
☐	P108	3 psig
☐	P102	3 psig
☐	P103	3 psig
☐	P105	3 psig
☐	P202	0 psig
☐	P501	5-10 psig
☐	Hydrogen bottles	closed
☐	R101	closed
☐	R102	closed
☐	R103	closed
☐	R106	closed
☐	Helium bottle	closed
☐	R104	closed
☐	MP101	not in use
☐	Turbo 201	in use
☐	Turbo 301	not in use
☐	PT101	0.7-0.8 bar
☐	PT102	positive pressure
☐	PT103	positive pressure
☐	PT105	positive pressure
☐	PT106	about 0.9 bar
☐	PT201	0.0 bar
☐	PT202	0.000 bar
☐	PT204	$< 10^{-5}$ Torr
☐	PT301	not in use
☐	PT302	not in use
☐	RGA	in use on IVC

Name: _____ Date: _____

E2. Procedure: Purging hydrogen from the target cell and filling the lines with helium

☐ 1. The target is at room temperature and full of hydrogen gas as also the relief chamber.

☐ 2. Confirm that all initial conditions for procedure E are met, they should be the same as the final conditions for procedure D.

☐ 3. Turn on mechanical pump MP101 and turbo pump Turbo 301.

☐ 4. Open valves MV114, MV115, MV116, MV117, MV109 and MV128.

Pumping hydrogen out from the target cell:

☐ 5. Open first valve MV107 and then valves MV126 and MV129. Wait until PT106 or PT101 show less than 0.01 bar. This will pump hydrogen out of the target cell, connecting lines, and the relief chamber.

☐ 6. Close valve MV115.

☐ 8. Open valve MV119 to backfill the target cell, connecting lines, and the relief chamber with helium. Close valve MV119 when PT106 reaches 0.77 bar. Then close valves MV107, MV116, and MV128.

☐ 9. Open valve MV115.

☐ 10. When PT106 reaches 0.005 bar then close valve MV115.

☐ 11. Open valve MV124.

☐ 12. When PT302 on Turbo 301 drops below 10^{-4} Torr open pneumatic valve PV303 and close pneumatic valve PV207.

☐ 13. Monitor the residual gases in the target with the RGA. When the partial pressures have flatlined record the values.

☐ 14. Close valve PV303 and open valve PV207.

☐ 15. Close valve MV124.

☐ 16. Open valve MV119 and backfill the target cell with helium gas until PT106 reaches 0.8 bar then close valve MV119.

☐ 17. The target and all the plumbing contain helium. Turn off Turbo 301 and MP101. Vent pump MP301 through MV302 and then vent MP101.

☐ 18. Close valves MV129, MV126, MV125, MV117, and MV109.

☐ 19. Check that all final conditions for procedure E are met.

The target is now parked with helium gas at room temperature in safe conditions.

Name: _____ Date: _____

E3. Purging hydrogen from the target cell and filling the lines with helium

Final state of system:

☐	MV102	closed	☐	PV207	open
☐	MV104	closed	☐	PV303	closed
☐	MV106	closed	☐	MGV200	open
☐	MV107	closed	☐	MGV128	locked open
☐	MV108	closed	☐	MGV208	locked open
☐	MV109	closed	☐	P107	3 psig
☐	MV113	closed	☐	P108	3 psig
☐	MV114	closed	☐	P102	0 psig
☐	MV115	closed	☐	P103	0 psig
☐	MV116	closed	☐	P105	0 psig
☐	MV117	closed	☐	P202	0.00 psig
☐	MV119	closed	☐	P501	5-10 psig
☐	MV120	open	☐	Hydrogen bottles	closed
☐	MV124	closed	☐	R101	closed
☐	MV125	closed	☐	R102	closed
☐	MV126	closed	☐	R103	closed
☐	MV127	closed	☐	R106	closed
☐	MV128	closed	☐	Helium bottle	closed
☐	MV129	closed	☐	R104	closed
☐	MV131	open	☐	MP101	not in use
☐	MV132	closed	☐	Turbo 201	in use
☐	MV133	closed	☐	Turbo 301	not in use
☐	MV134	closed	☐	PT101	0.7-0.8 bar
☐	MV135	closed	☐	PT102	positive pressure
☐	MV201	open	☐	PT103	positive pressure
☐	MV202	closed	☐	PT105	positive pressure
☐	MV301	closed	☐	PT106	about 0.9 bar
☐	MV302	closed	☐	PT201	0.00 bar
☐	MV305	open	☐	PT202	0.000 bar
☐	PV100	closed	☐	PT204	10^{-5} Torr
☐	MV505	open	☐	PT301	not in use
☐	FCV100	fully open	☐	PT302	not in use
☐	PV204	open	☐	RGA	in use on IVC

Name: _____ Date: _____

F1. Replacing depleted hydrogen bottles

Initial state of system:

☐	MV102	closed
☐	MV104	closed
☐	MV106	closed
☐	MV107	closed
☐	MV108	closed
☐	MV109	closed
☐	MV113	closed
☐	MV114	closed
☐	MV110	open
☐	MV115	closed
☐	MV116	closed
☐	MV117	closed
☐	MV119	closed
☐	MV120	open
☐	MV124	closed
☐	MV125	closed
☐	MV126	closed
☐	MV127	closed
☐	MV128	closed
☐	MV129	closed
☐	MV131	open
☐	MV132	closed
☐	MV133	closed
☐	MV134	closed
☐	MV135	closed
☐	MV201	open
☐	MV202	closed
☐	MV301	closed
☐	MV302	closed
☐	MV305	open
☐	PV100	closed
☐	MV505	open
☐	FCV100	fully open

☐	PV204	open
☐	PV205	closed
☐	PV207	open
☐	PV303	closed
☐	MGV200	open
☐	MGV128	locked open
☐	MGV208	locked open
☐	P107	3 psig
☐	P108	3 psig
☐	P102	0 psig
☐	P103	0 psig
☐	P105	0 psig
☐	P202	0 psig
☐	P501	5-10 psig
☐	Hydrogen bottles	closed
☐	R101	closed
☐	R102	closed
☐	R103	closed
☐	R106	closed
☐	Helium bottle	closed
☐	R104	closed
☐	MP101	not in use
☐	Turbo 201	in use
☐	Turbo 301	not in use
☐	PT101	0.7-0.8 bar
☐	PT102	positive pressure
☐	PT103	positive pressure
☐	PT105	positive pressure
☐	PT106	about 0.9 bar
☐	PT201	0.00 bar
☐	PT202	0.000 bar
☐	PT204	$< 10^{-5}$ Torr
☐	PT301	not in use
☐	PT302	not in use
☐	RGA	in use on IVC

Name: _____ Date: _____

F2. Procedure: Replacing depleted hydrogen bottles

The procedure assumes that a hydrogen bottle(s) has been depleted and needs to be replaced.

- ☐ 1. Confirm that all initial conditions for procedure F are met.
- ☐ 2. Turn on pump MP101.
- ☐ 3. Open valves MV114, MV115, MV109, MV108, MV132, and PV100 and open valve MV102 or MV104 or MV106 of the bottle being replaced.
- ☐ 4. Check that the bottle being replaced is closed and then fully open its regulator R101(and/or R102, and/or R103).
- ☐ 5. Check that the helium bottle on the hydrogen gas manifold is closed and fully open its regulator R104.
- ☐ 6. Wait until PT102 or PT103 has dropped to their zero pressure and then close valve MV131 and MV132.
- ☐ 7. Close the helium bottle regulator R104, open the helium bottle and set its regulator to 0 psig.
- ☐ 8. Close the helium regulator when P107 indicates 0 psig.
- ☐ 9. Fully close all the hydrogen bottles regulators R101, R102 and R103, and replace the depleted hydrogen bottle(s) from the manifold.
- ☐ 10. Open valve MV131 and MV132 and open all the hydrogen bottle regulators R101, R102 and R103.
- ☐ 11. Close valve MV131 and MV132 when PT102 or PT103 drops to their zero.
- ☐ 12. Open the helium bottle regulator R104 and set its pressure to 3 psig.
- ☐ 13. Close the hydrogen bottles regulators on the manifold R101, R102 and R103.
- ☐ 14. Close valve MV114 and MV115.
- ☐ 15. Open valve MV131 and MV132 to put 3 psig of helium gas in the lines connecting the hydrogen gas manifold with the gas panel.
- ☐ 16. When P107 reaches 3 psig close the helium regulator R104 and its bottle.
- ☐ 17. Close valves MV108, MV109 and PV100.
- ☐ 18. Turn the pump MP101 off and vent it.

☐ 19. Check that all final conditions for procedure F are met, they should be the same as the initial conditions for this procedure.

Name: _____ Date: _____

F3. Replacing depleted hydrogen bottles; final state of system

Final state:

☐	MV102	closed
☐	MV104	closed
☐	MV106	closed
☐	MV107	closed
☐	MV108	closed
☐	MV109	closed
☐	MV110	open
☐	MV113	closed
☐	MV114	closed
☐	MV115	closed
☐	MV116	closed
☐	MV117	closed
☐	MV119	closed
☐	MV120	open
☐	MV124	closed
☐	MV125	closed
☐	MV126	closed
☐	MV127	closed
☐	MV128	closed
☐	MV129	closed
☐	MV131	open
☐	MV132	closed
☐	MV133	closed
☐	MV134	closed
☐	MV135	closed
☐	MV201	open
☐	MV202	closed
☐	MV301	closed
☐	MV302	closed
☐	MV305	open
☐	PV100	closed
☐	MV505	open
☐	FCV100	fully open

☐	PV204	open
☐	PV205	closed
☐	PV207	open
☐	PV303	closed
☐	MGV200	open
☐	MGV128	locked open
☐	MGV208	locked open
☐	P107	3 psig
☐	P108	3 psig
☐	P102	0 psig
☐	P103	0 psig
☐	P105	0 psig
☐	P202	0 psig
☐	P501	5-10 psig
☐	Hydrogen bottles	closed
☐	R101	closed
☐	R102	closed
☐	R103	closed
☐	R106	closed
☐	Helium bottle	closed
☐	R104	closed
☐	MP101	not in use
☐	Turbo 201	in use
☐	Turbo 301	not in use
☐	PT101	0.7-0.8 bar
☐	PT102	positive pressure
☐	PT103	positive pressure
☐	PT105	positive pressure
☐	PT106	about 0.9 bar
☐	PT201	0.00 bar
☐	PT202	0.000 bar
☐	PT204	$< 10^{-5}$ Torr
☐	PT301	not in use
☐	PT302	not in use
☐	RGA	in use on IVC

Name: _____ Date: _____

G. Procedure: Handling of helium Dewar and transfer line

☐ 1. Inspect first that in the Dewar the low pressure relief valve is open, transfer line valve and vent valve are closed, the pressure gauge indicates a positive pressure (but be skeptical, often the pressure gauge is not functional), and no ice buildup around the neck.

☐ 2. Start to feed the transfer line slowly into the Dewar keep valves and connectors closed so that in the Dewar pressure is positive. If transfer line has a valve keep it partially open to flush air out.

☐ 3. Complete installation of the transfer line into the Dewar. If Dewar pressure increases over 4-5 psid then vent the dewar.

☐ 4. Install the other end of the transfer line into the pre cooler. If the cryostat is cold, then be sure that also in the pre cooler has a positive helium pressure before opening the pre cooler transfer line inlet port.

☐ 5. To transfer cold gas from the helium Dewar to the pre cooler, keep pressure in the Dewar about 4-7 psid. Note that the gauges on dewars in general are not reliable.

☐ 6. Regulate the helium flow rate with the valve on the top of the cryostat, try to keep pre cooler temperature at about 30 K, below the freezing point of hydrogen.

List of components

CV101	LANL	3 psid
CV102	Swagelok	
CV103	Swagelok	30 psid
GV128	MDC GV-1500V	
GV208	Varian 951-5226	
MGV200	Key GV-25-CM	
MV108, 109, 110, 115, 116, 117	Swagelok SS-DLTW4	4×10^{-9} std.cm$^3/s$
MV119, 120, 124, 125, 126, 129		$<$ 1500 psi
102, 104, 106,128, 127, 131, 133, 134, 135, 505	Swagelok	
MV107		
FCV100, 307	...	
FM101	Sierra Instruments 822SL8	$<$ 1000 psi
FR	...	...
P102, 103, 105, 107	...	...
P202, 501	...	...
PT102, 103, 105, 106	Omega PX880-100GI	$<$ 200 psi
PT108	Omega PX880-300GI	$<$ 600 psi
PT101, 201, 203, 301, 302	...	$<$ xxx psi
PV100	Swagelok 6LVV-DPHVFR4-P	$<$ 3045 psi.
PV204, 205, 207, 303	...	$<$ $xxxx$ psi.
R101, 102, 103, 104	Tescom 64-2643 VRT12	$<$ 3500 psi
RD101	...	$<$ 29 psid
RD201, 202	...	$<$ 49 psid
RV104	...	$<$ 20 psid
RV102, 103, 106	...	$<$ 100 psid
RGA	SRS...	...
TC	...	$10^{-4} - 760$ torr
MP101	Adixen Pascal 2010C2	rated for 2×10^{-3} torr
Turbo1, 2	...	...
OPC	...	...
CT	LANSCE	...