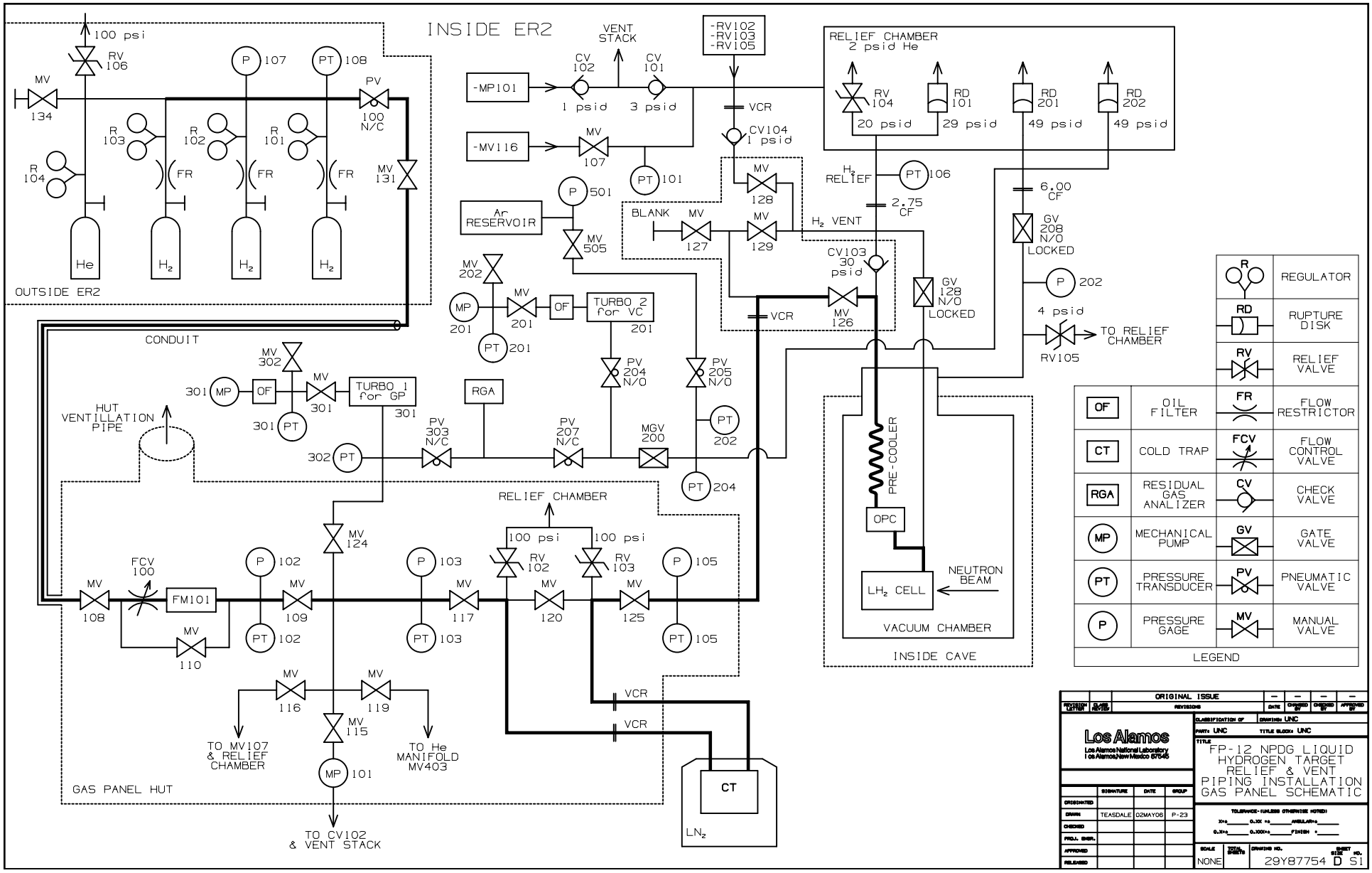
INSIDE ER2
OUTSIDE ER2
100 psi
RV 106
MV 134
P 107
PT 108
PV 100 N/C
R 103
R 102
R 101
R 104
FR
MV 131
He
H2
VENT STACK
CV 102
CV 101
-MP101
1 psid
3 psid
-MV116
MV 107
PT 101
-RV102
-RV103
-RV105
VCR
CV104 1 psid
RELIEF CHAMBER 2 psid He
RV 104
20 psid
RD 101
29 psid
RD 201
49 psid
RD 202
49 psid
H2 RELIEF
PT 106
6.00 CF
2.75 CF
MV 128
Ar RESERVOIR
P 501
MV 505
BLANK
MV 127
MV 129
H2 VENT
CV103 30 psid
MV 126
GV 208 N/O LOCKED
GV 128 N/O LOCKED
P 202
4 psid
TO RELIEF CHAMBER
RV105
MV 202
MP 201
MV 201
OF
TURBO 2 for VC 201
PT 201
CONDUIT
MV 302
301 MP
OF
MV 301
TURBO 1 for GP 301
301 PT
HUT VENTILLATION PIPE
RGA
PV 204 N/O
PV 205 N/O
PT 202
302 PT
PV 303 N/C
PV 207 N/C
MGV 200
PT 204
RELIEF CHAMBER
MV 124
100 psi
RV 102
RV 103
P 102
P 103
P 105
FCV 100
MV 108
FM101
MV 109
MV 117
MV 120
MV 125
MV 110
PT 102
PT 103
PT 105
MV 116
MV 119
MV 115
TO MV107 & RELIEF CHAMBER
TO He MANIFOLD MV403
MP 101
GAS PANEL HUT
TO CV102 & VENT STACK
CT
LN2
PRE-COOLER
OPC
LH2 CELL
NEUTRON BEAM
VACUUM CHAMBER
INSIDE CAVE
LEGEND
OF OIL FILTER
CT COLD TRAP
RGA RESIDUAL GAS ANALIZER
MP MECHANICAL PUMP
PT PRESSURE TRANSDUCER
P PRESSURE GAGE
R REGULATOR
RD RUPTURE DISK
RV RELIEF VALVE
FR FLOW RESTRICTOR
FCV FLOW CONTROL VALVE
CV CHECK VALVE
GV GATE VALVE
PV PNEUMATIC VALVE
MV MANUAL VALVE
ORIGINAL ISSUE
Los Alamos
Los Alamos National Laboratory
Los Alamos, New Mexico 87545
FP-12 NPDG LIQUID HYDROGEN TARGET RELIEF & VENT PIPING INSTALLATION GAS PANEL SCHEMATIC
TEASDALE 02MAY06 P-23
NONE
29Y87754 D S1