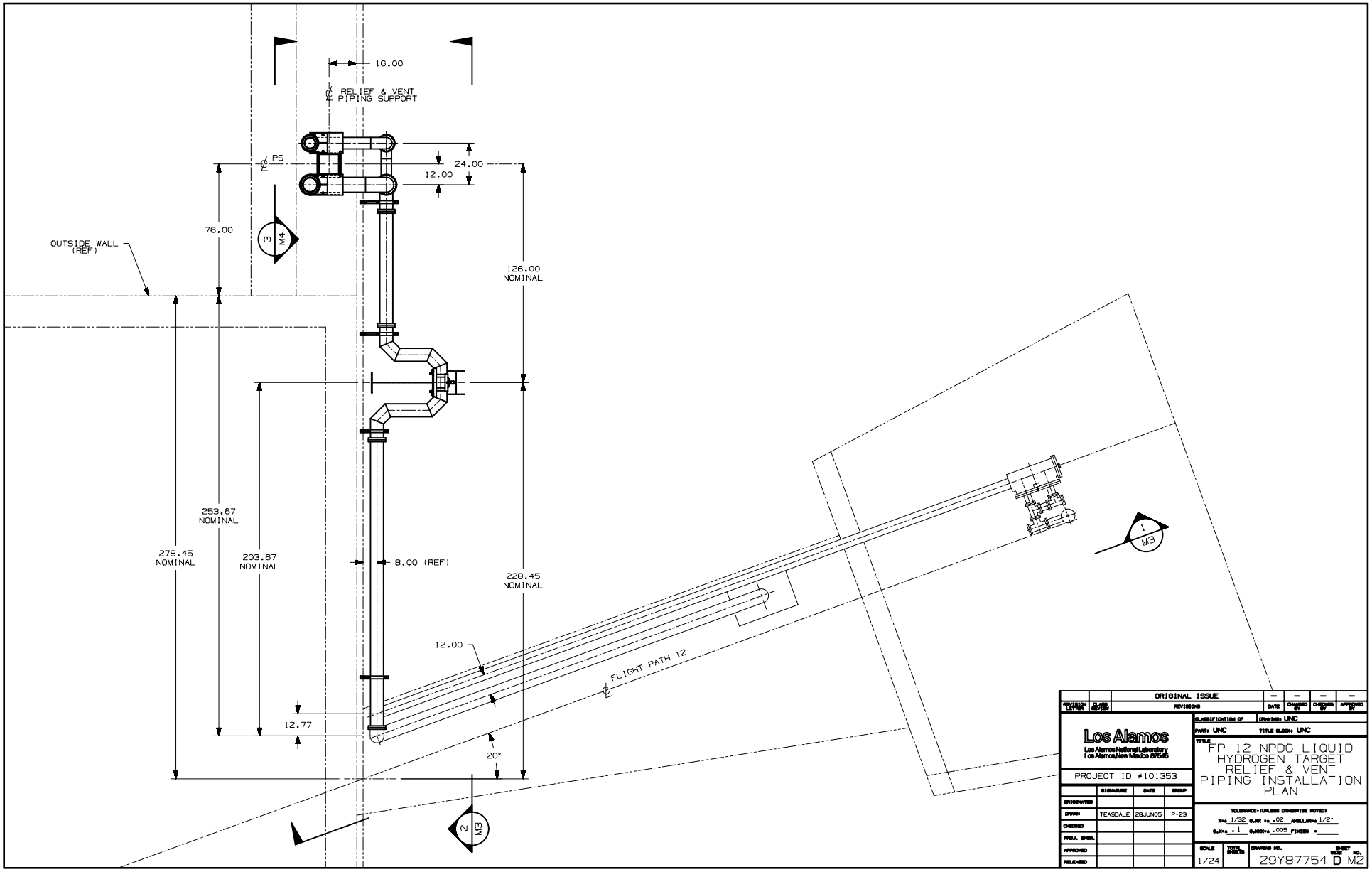
16.00
℄ RELIEF & VENT PIPING SUPPORT
℄ PS
24.00
12.00
76.00
3
M4
OUTSIDE WALL (REF)
126.00 NOMINAL
253.67 NOMINAL
278.45 NOMINAL
203.67 NOMINAL
8.00 (REF)
228.45 NOMINAL
12.00
℄ FLIGHT PATH 12
12.77
20°
2
M3
1
M3
ORIGINAL ISSUE
REVISIONS
DATE
CHANGED BY
CHECKED BY
APPROVED BY
REVISION LETTER
CLASS REVIEW
Los Alamos
Los Alamos National Laboratory
Los Alamos, New Mexico 87545
PROJECT ID #101353
SIGNATURE
DATE
GROUP
ORIGINATED
DRAWN
TEASDALE
28JUN05
P-23
CHECKED
PROJ. ENGR.
APPROVED
RELEASED
CLASSIFICATION OF
DRAWING: UNC
PART: UNC
TITLE BLOCK: UNC
TITLE
FP-12 NPDG LIQUID HYDROGEN TARGET RELIEF & VENT PIPING INSTALLATION PLAN
TOLERANCE-(UNLESS OTHERWISE NOTED)
X=± 1/32 0.XX =± .02 ANGULAR=± 1/2°
0.X=± .1 0.XXX=± .005 FINISH =
SCALE
1/24
TOTAL SHEETS
DRAWING NO.
29Y87754
SHEET SIZE
D
NO.
M2