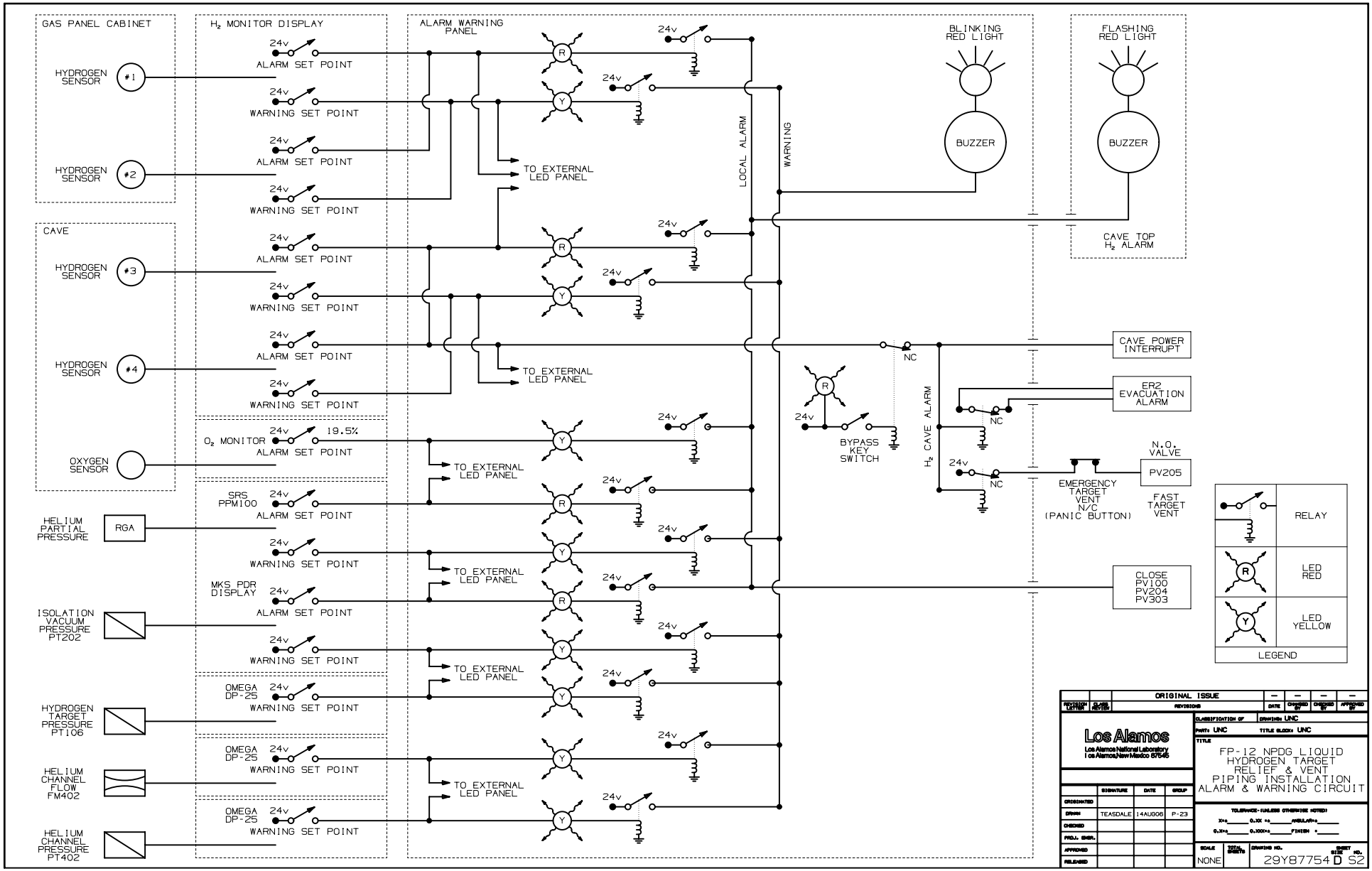
GAS PANEL CABINET
HYDROGEN SENSOR #1
HYDROGEN SENSOR #2
CAVE
HYDROGEN SENSOR #3
HYDROGEN SENSOR #4
OXYGEN SENSOR
HELIUM PARTIAL PRESSURE
RGA
ISOLATION VACUUM PRESSURE PT202
HYDROGEN TARGET PRESSURE PT106
HELIUM CHANNEL FLOW FM402
HELIUM CHANNEL PRESSURE PT402
H2 MONITOR DISPLAY
24v
ALARM SET POINT
WARNING SET POINT
O2 MONITOR
19.5%
SRS PPM100
MKS PDR DISPLAY
OMEGA DP-25
TO EXTERNAL LED PANEL
ALARM WARNING PANEL
R
Y
LOCAL ALARM
WARNING
BLINKING RED LIGHT
BUZZER
FLASHING RED LIGHT
CAVE TOP H2 ALARM
NC
BYPASS KEY SWITCH
H2 CAVE ALARM
CAVE POWER INTERRUPT
ER2 EVACUATION ALARM
N.O. VALVE
PV205
EMERGENCY TARGET VENT N/C (PANIC BUTTON)
FAST TARGET VENT
CLOSE PV100 PV204 PV303
RELAY
LED RED
LED YELLOW
LEGEND
ORIGINAL ISSUE
REVISION LETTER
CLASS REVISED
REVISIONS
DATE
CHANGED BY
CHECKED BY
APPROVED BY
Los Alamos
Los Alamos National Laboratory
Los Alamos, New Mexico 87545
CLASSIFICATION OF
DRAWING UNC
PARTY UNC
TITLE BLOCK UNC
TITLE
FP-12 NPDG LIQUID HYDROGEN TARGET RELIEF & VENT PIPING INSTALLATION ALARM & WARNING CIRCUIT
SIGNATURE
DATE
GROUP
ORIGINATED
DRAWN
TEASDALE
14AUG06
P-23
CHECKED
PROJ. ENGR.
APPROVED
RELEASED
TOLERANCE-(UNLESS OTHERWISE NOTED)
X=±_____ 0.XX =±_____ ANGULAR=±_____
0.X=±_____ 0.XXX=±_____ FINISH =_____
SCALE
NONE
TOTAL SHEETS
DRAWING NO.
29Y87754
SHEET SIZE
D
SHEET NO.
S2