Fundamental Neutron Physics Beamline at the Spallation Neutron Source

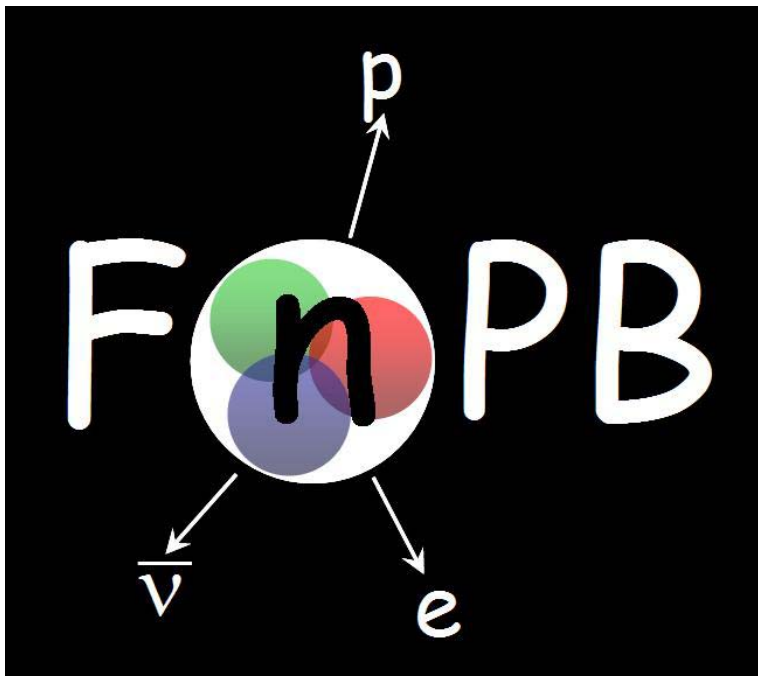

Overview and Status
21 February 2005

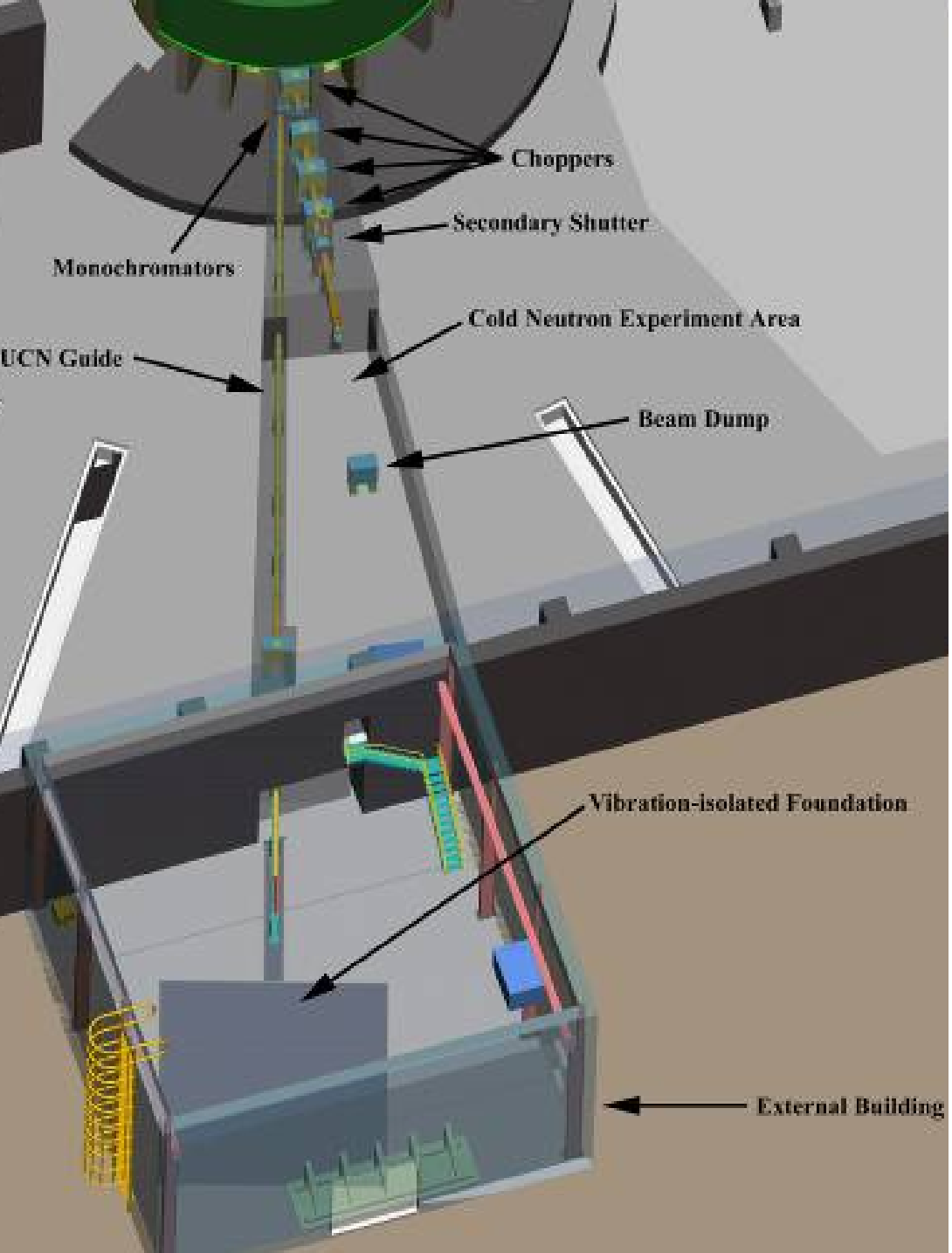

- The FNPB will provide two beamlines that will house experiments selected in a proposal-driven, peer-reviewed process.
  - The area inside the SNS target building will be appropriate for experiments that can utilize the full cold neutron energy spectrum.
  - The external facility will be appropriate for experiments that need ultra cold neutrons generated in superfluid Helium.
- The beamlines consist of:
  - Shielding
  - Supermirror neutron guides
  - Frame-overlap choppers
  - Beam dumps
  - An 8.9A double-crystal monochromator
  - An external facility with an isolated floor slab
  - Secondary shutters to provide for independent operations.

SNS Status

- The FNPB is a part of the broad instrument suite at the Spallation Neutron Source (SNS), so it seems appropriate to start with the status of the SNS itself.

- The SNS is a $1.4B DOE facility under construction at Oak Ridge National Lab. Completion is scheduled for April, 2006.
- The SNS, built by a six-lab consortium, will be the world's most spallation neutron source (by > x10) at full power.
- It will enable world class measurements by a suite of neutron scattering instruments.
  - And by experiments using the FNPB!

The source/LINAC injects ~400 MHz 700 ns-wide 1 GeV pulses into the accumulator ring.

~1000 such pulses are stacked to create 60 Hz of extremely intense 700 ns pulses (1.5 x 10^{14} protons per pulse, 1 mA total current).

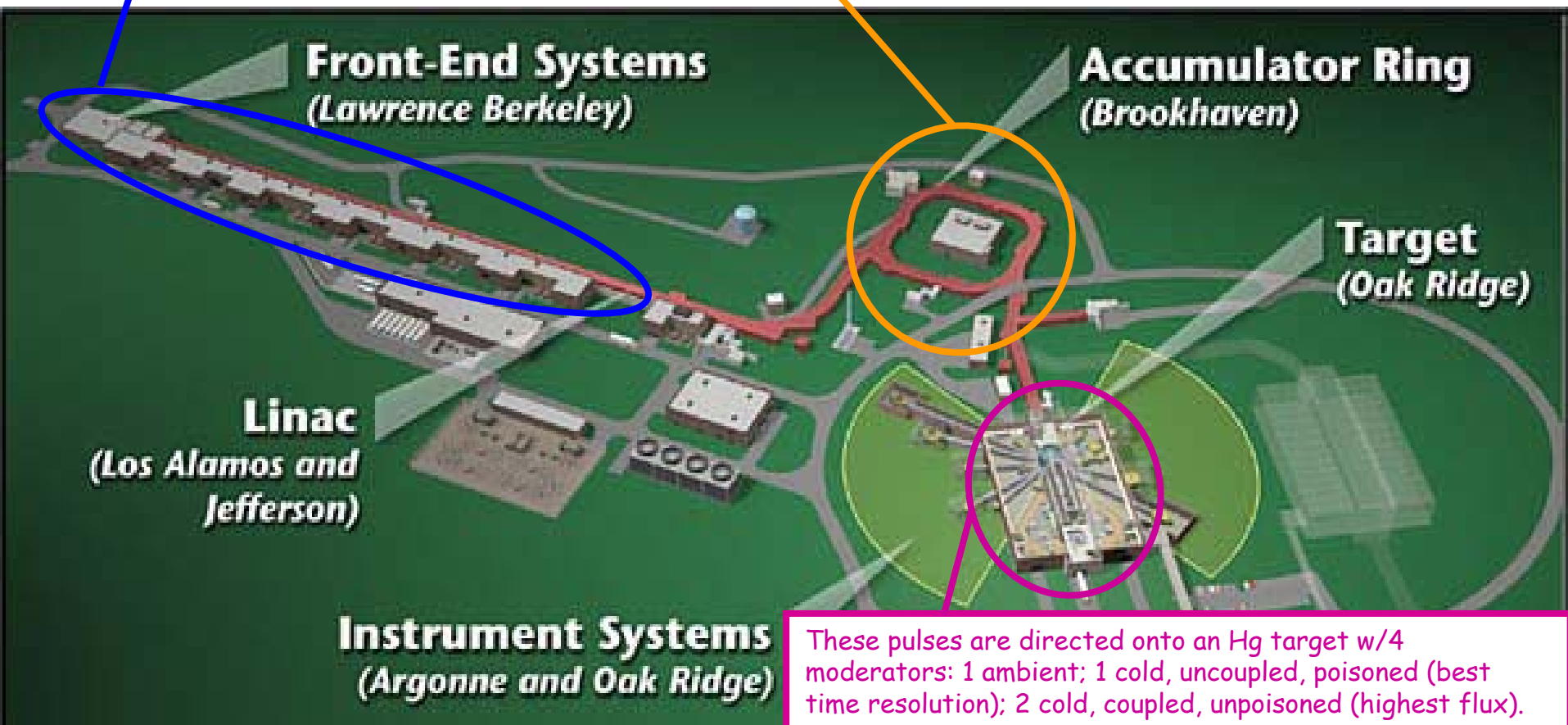

These pulses are directed onto an Hg target w/4 moderators: 1 ambient; 1 cold, uncoupled, poisoned (best time resolution); 2 cold, coupled, unpoisoned (highest flux).

The previous page showed an artist's conception of the SNS site. This photo shows the reality of it, in concrete, cranes and mud.

SNS Beam Diagnostics Web Page 12/01/2004

http://www.sns.gov/diagnostics/channel13/ch13.html

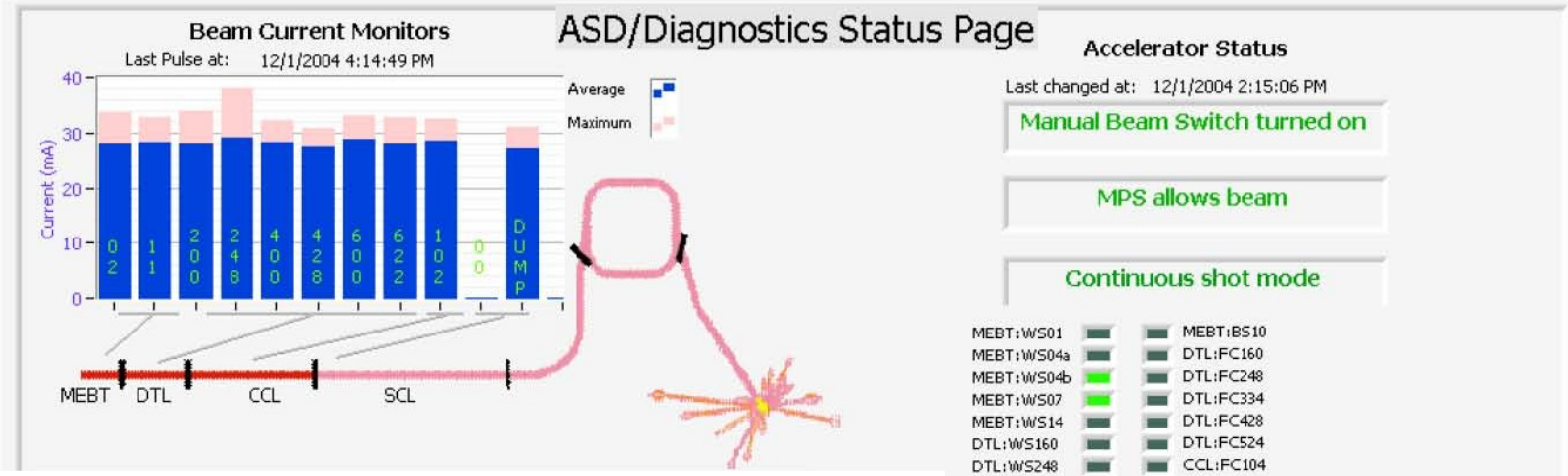

The publicly accessible SNS Beam Diagnostics page shows that, even with a year of construction left, commissioning has already started for the beginning of the neutron generating chain – the ion source and the first stages of the LINAC.

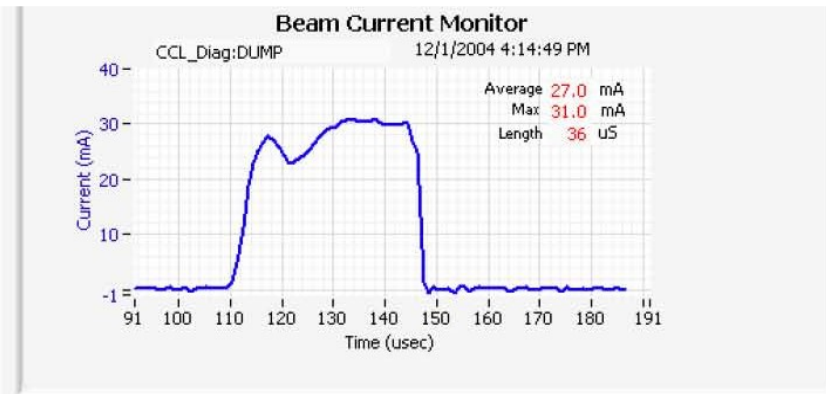

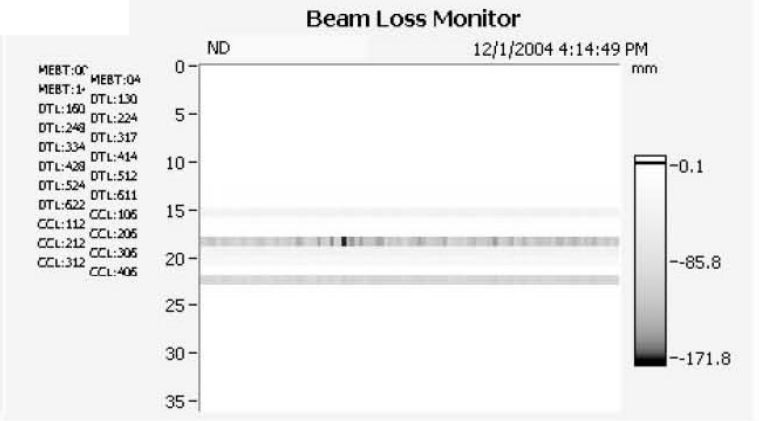

This is a picture of the SNS target hall showing drawings of all the instruments approved so far. The FNPB is at the middle-left, on flightpath 13. The external UCN facility and the perimeter shielding for the cold beamline are visible.

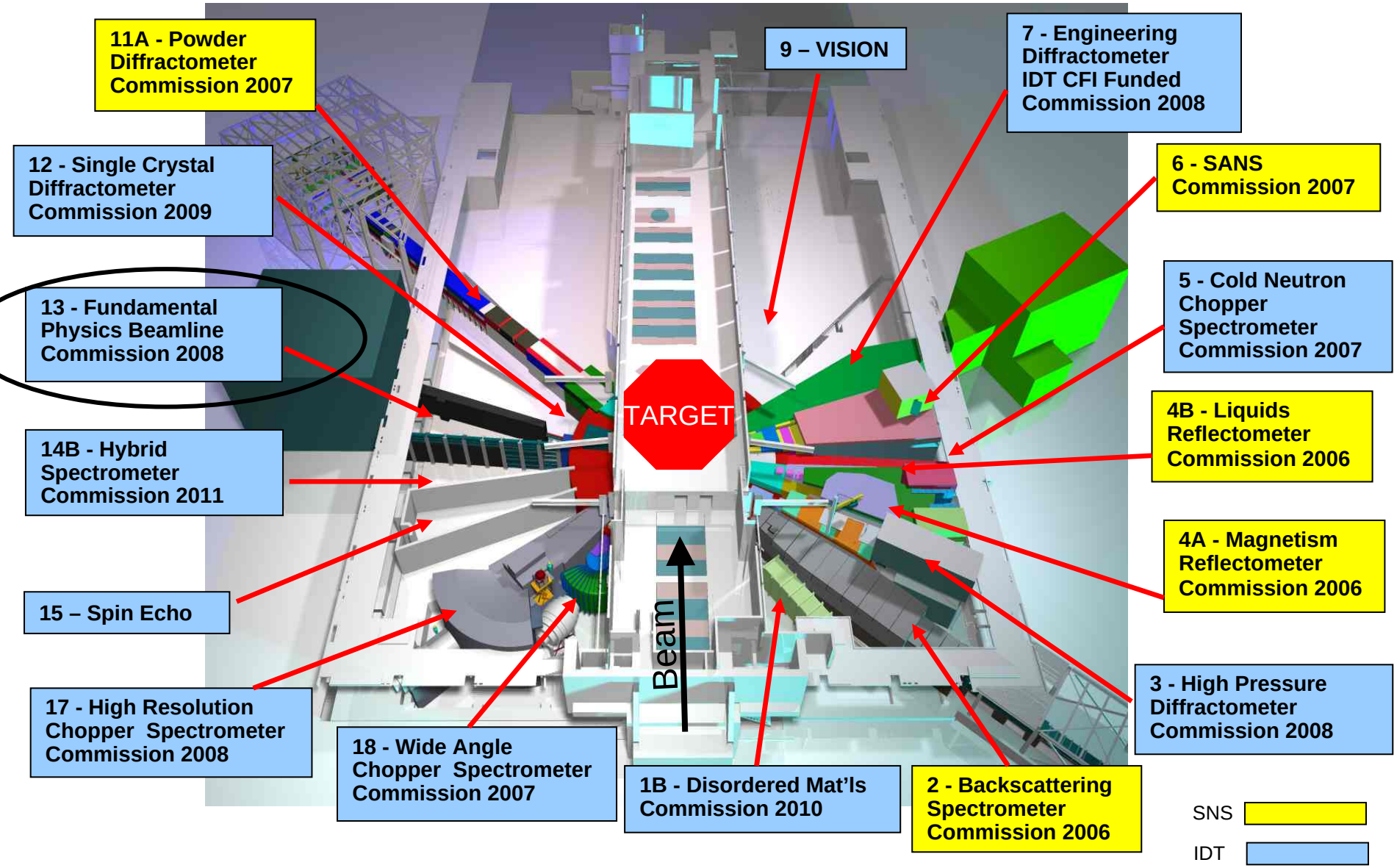

This picture shows a cutaway view of the target and the four moderators inside their shielding enclosure. Flightpath 13, which leads to the FNPB is indicated. The red and blue trays hold the "core guide", the piece of supermirror guide closest to the moderator face (more details later).

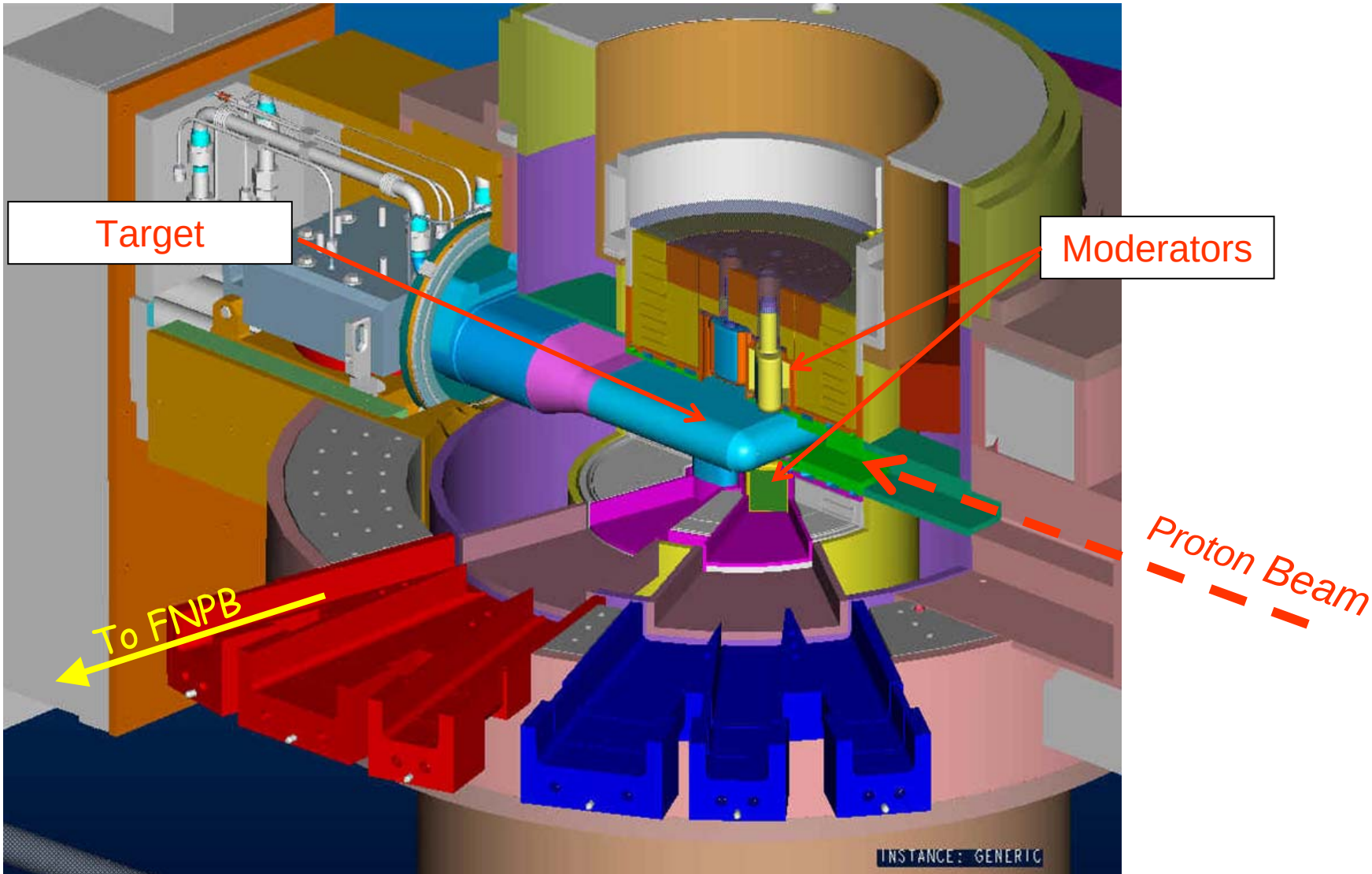

FNPB Status

- The following slides give a general overview of the FNPB beamlines and the pieces that make them up:
  - The core guide.
  - The shutter guide.
  - The shielding.
  - The choppers.
  - The double crystal monochromators.
  - The downstream guides.
  - The external facility.

- A top view of the inner elements of the two beamlines:
  - The core guide is located as close to the moderator as possible.
  - When the shutter is open the neutrons next see the shutter guide (5-vane, r = 117m bender), otherwise the beam stops.
  - The bender continues through the first frame overlap chopper and the double-crystal monochromator.
  - The monochromator extracts a slice of the beam around 8.9Å (and harmonics) and sends it down the UCN beamline to the external UCN facility. Chopper 1 must pass neutrons with this wavelength.
  - The beam passing through the monochromator is cleaned up by choppers 2-4 and sent down the cold beamline.
  - The secondary shutter allows independent operation of the two beamlines

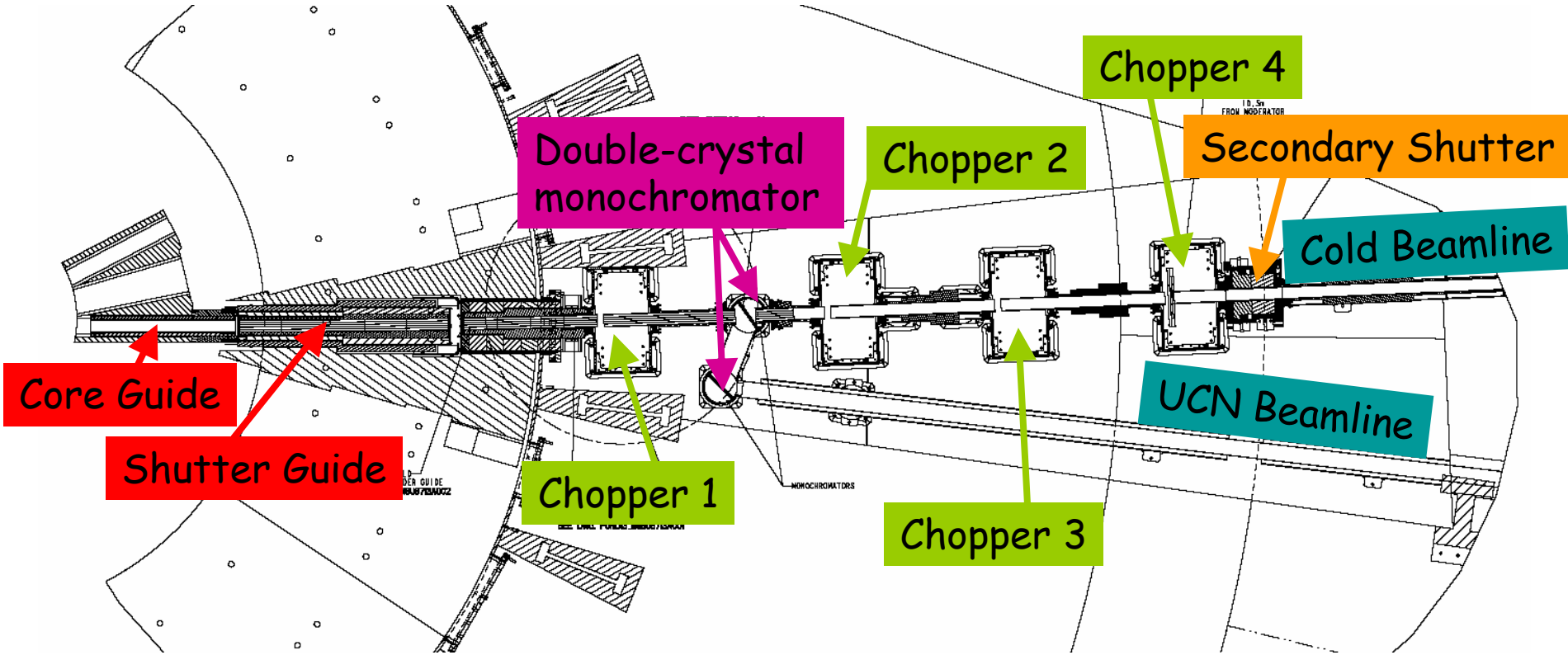

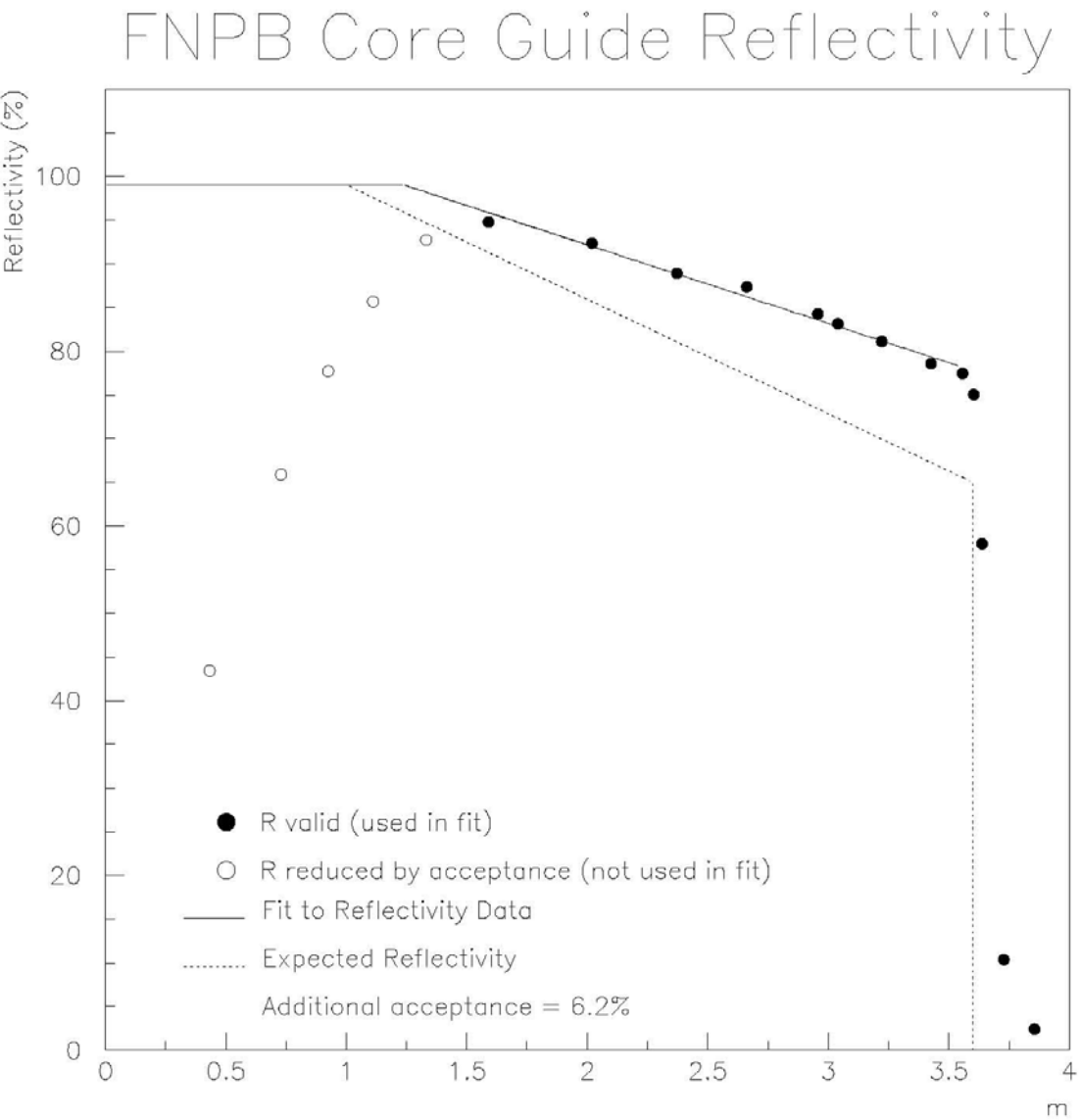

The plot on the left shows the measured reflectivity of the core guide significantly exceeds our goal, with r ~ 75% at m = 3.5.

The guide reflects light as well as neutrons as shown in this kaleidoscope picture of Geoff Greene viewed <u>through</u> the guide

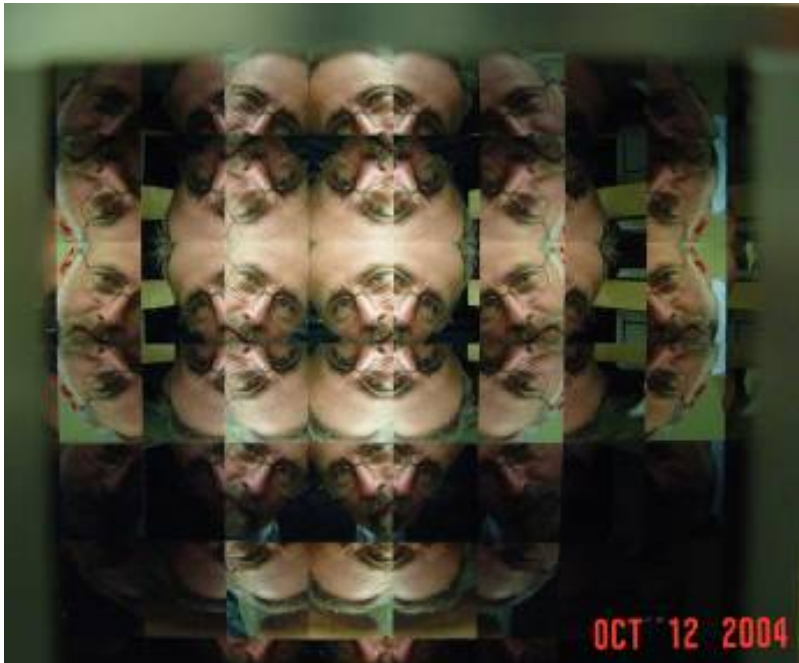

These pictures show the core guide being installed inside the core insert (top) and then the entire assembly being installed inside the target monolith (bottom).

The core insert holds the guide and provides a necessary vacuum seal and alignment fixtures.

Because of its proximity to the target the core guide is subject to a significant heat load and radiation dose. Thus the supermirror coating is deposited onto an Aluminum backing, rather than glass.

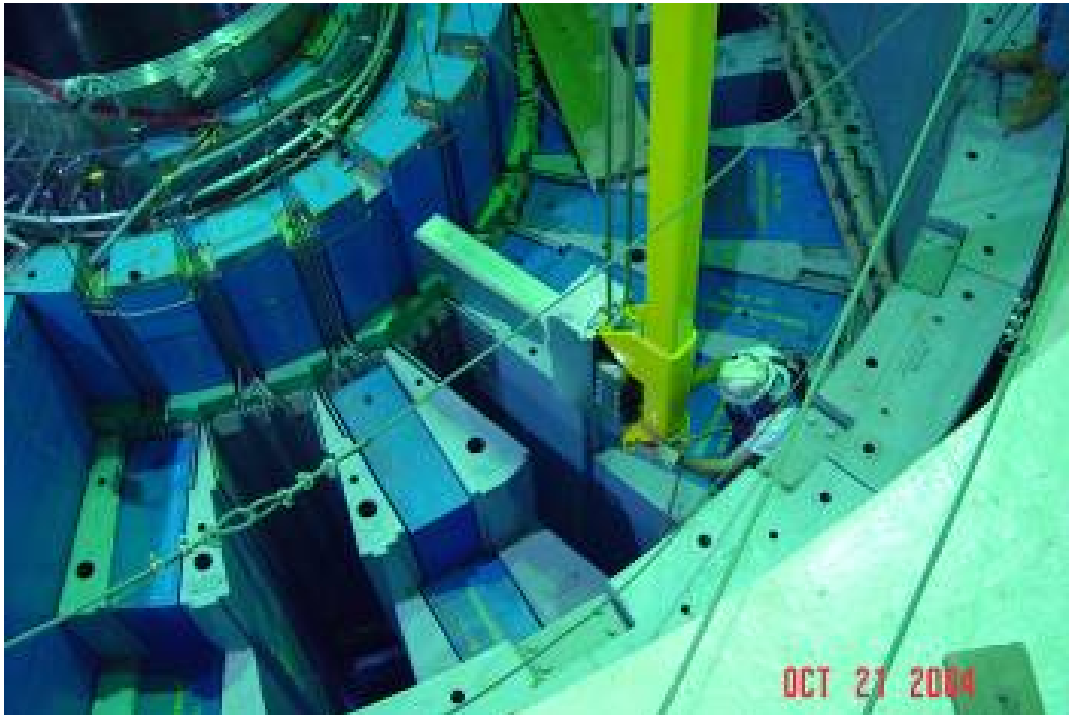

This picture shows the FNPB shutter guide on the bench at Swiss Neutronics.

The shutter guide is the start of our r = 117m bender that eliminates a line-of-sight view of the moderator.

Like the core guide the shutter guide will first be installed inside an insert. The insert will hold the guide and provide alignment fixtures so that the guide is repositioned exactly (within 100 μm) each time the shutter is opened and closed.

The shutter guide will be installed in March, 2005.

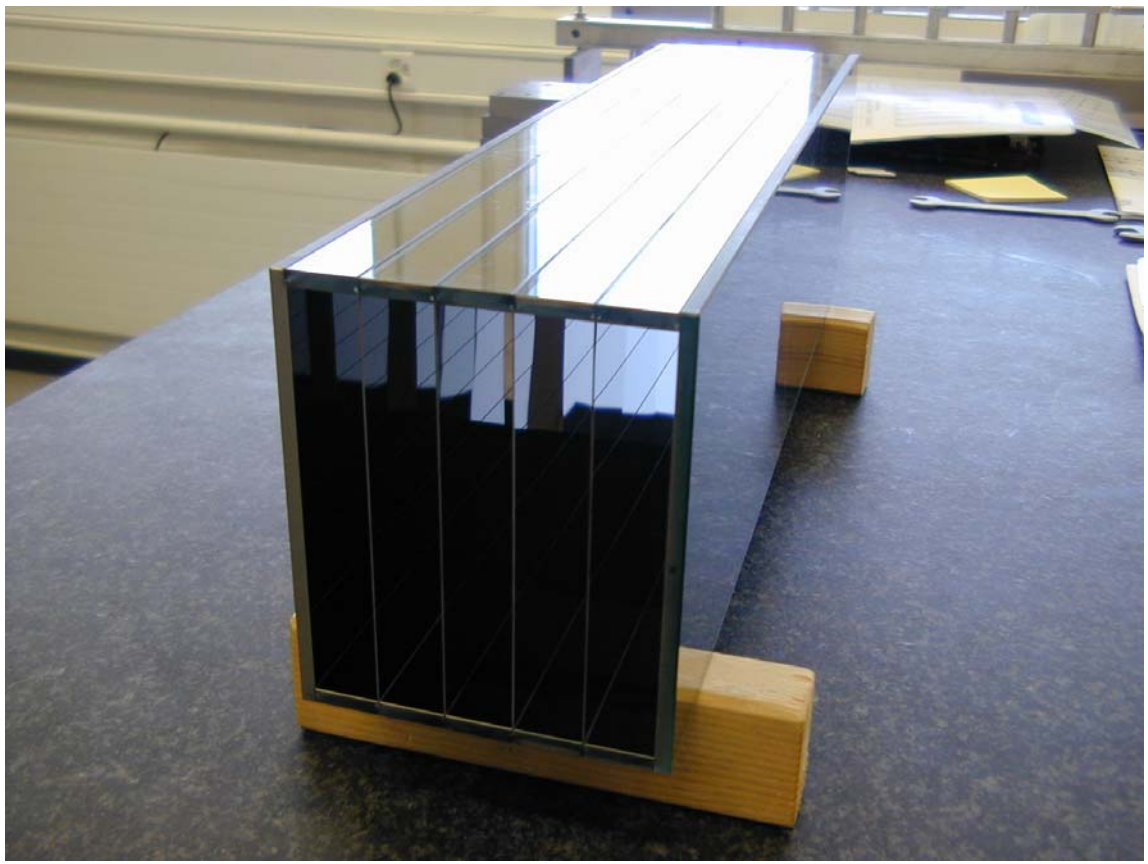

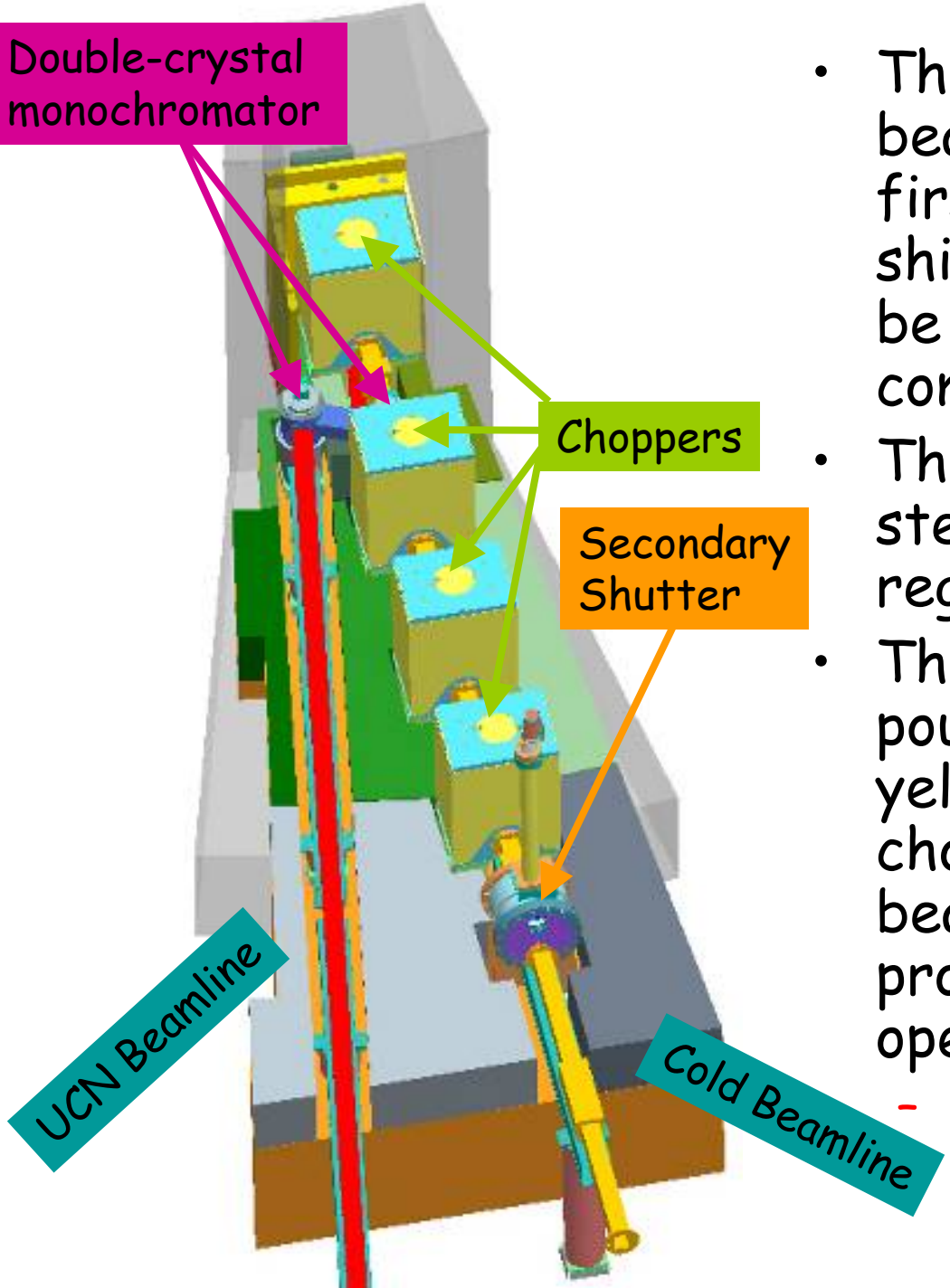

- This drawing shows the many beamline components in the first thirteen meters and the shielding blocks that need to be fitted around those components.
- The shielding is a mixture of steel, heavy concrete and regular concrete.
- The bottom layer (orange, poured-in-place) and the yellow region (surrounding chopper 1) are needed to allow beamline construction to proceed independent of SNS operations.
  - They will be purchased this FY.

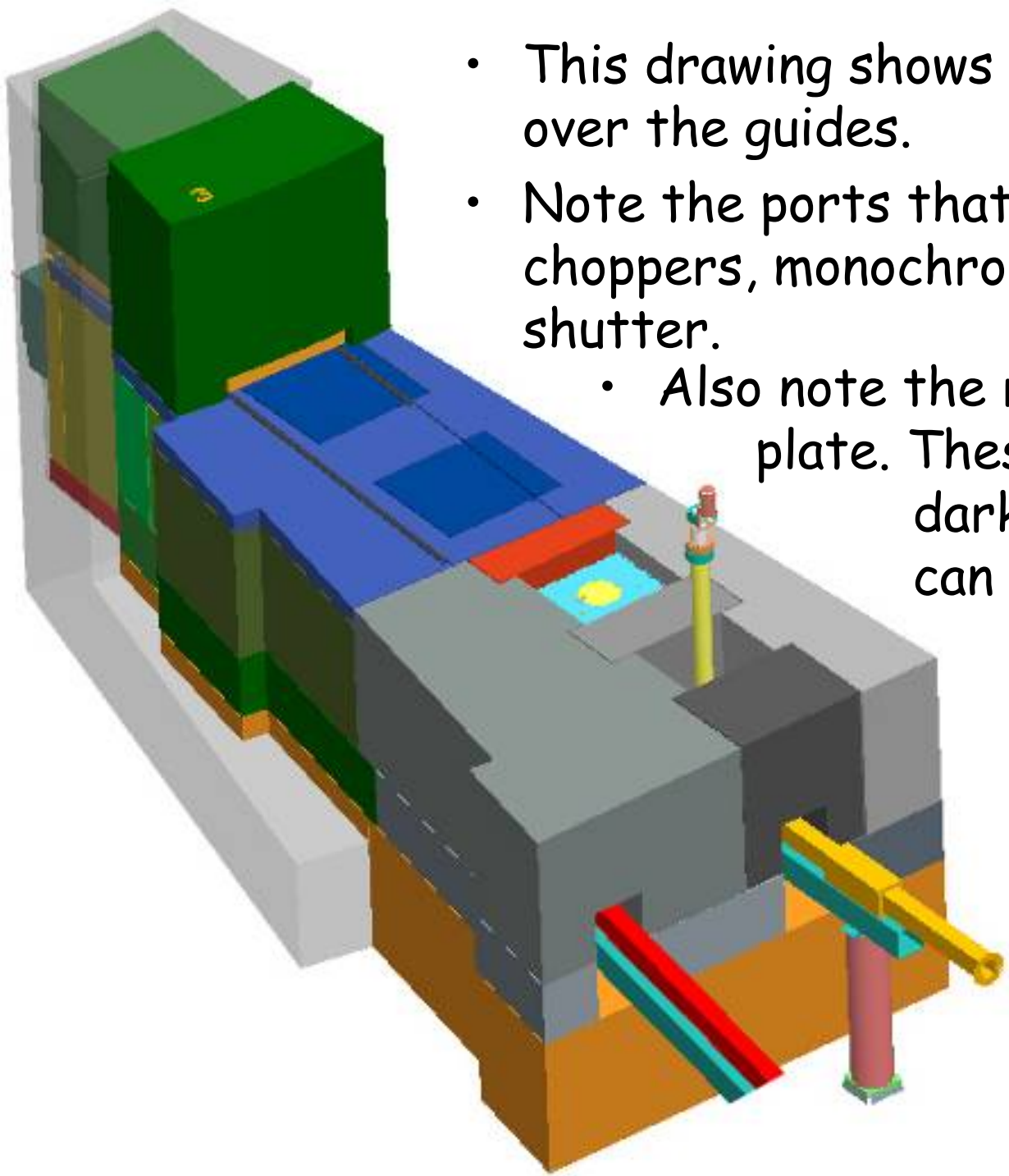

- This drawing shows the shielding built up over the guides.
- Note the ports that allow access to choppers, monochromator and secondary shutter.
  - Also note the rails on the dark blue plate. These are needed so the dark green block on top can be rolled out into a region the 30 ton building crane can access.

- This shows the shielding as it will look fully installed.

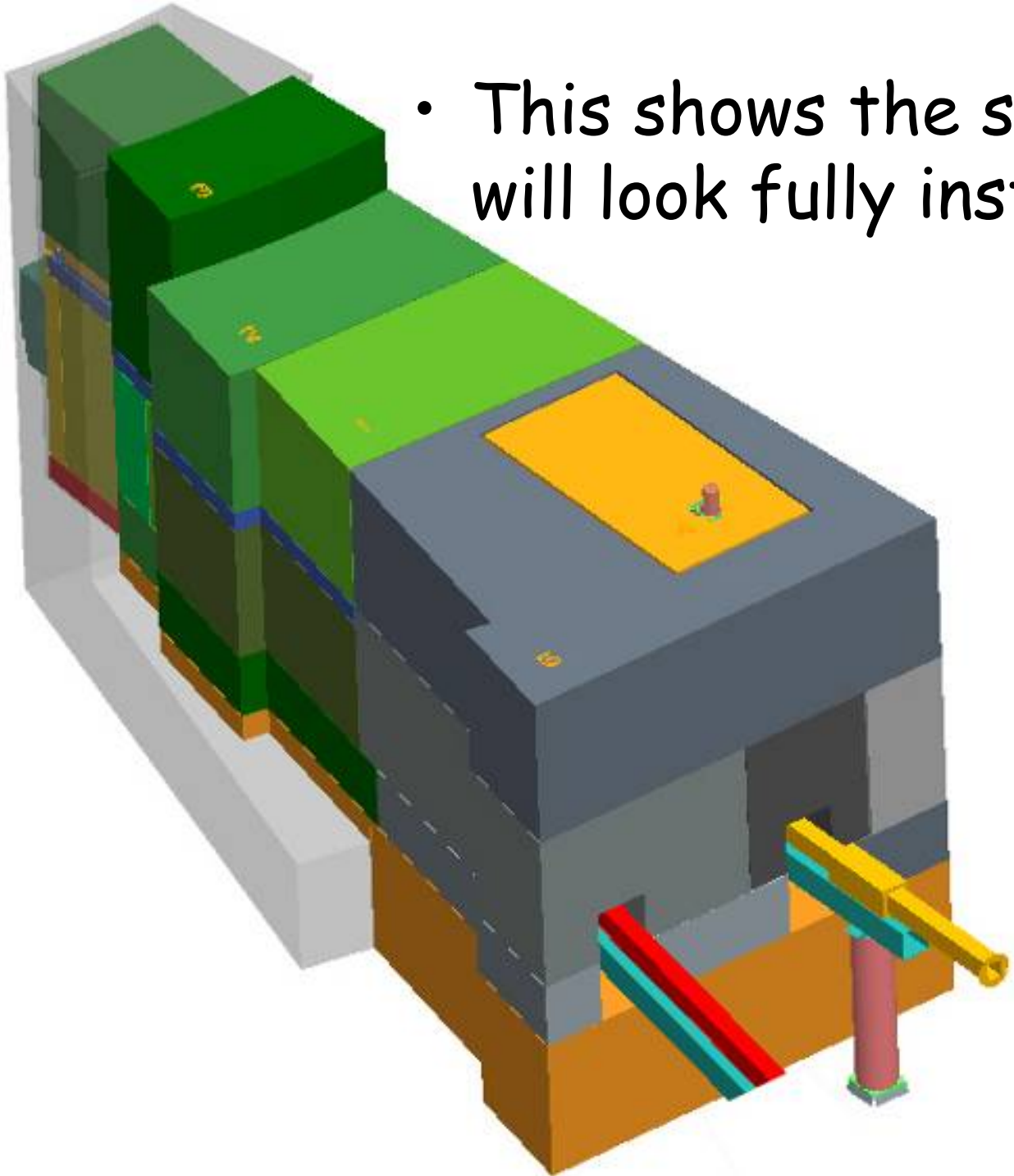

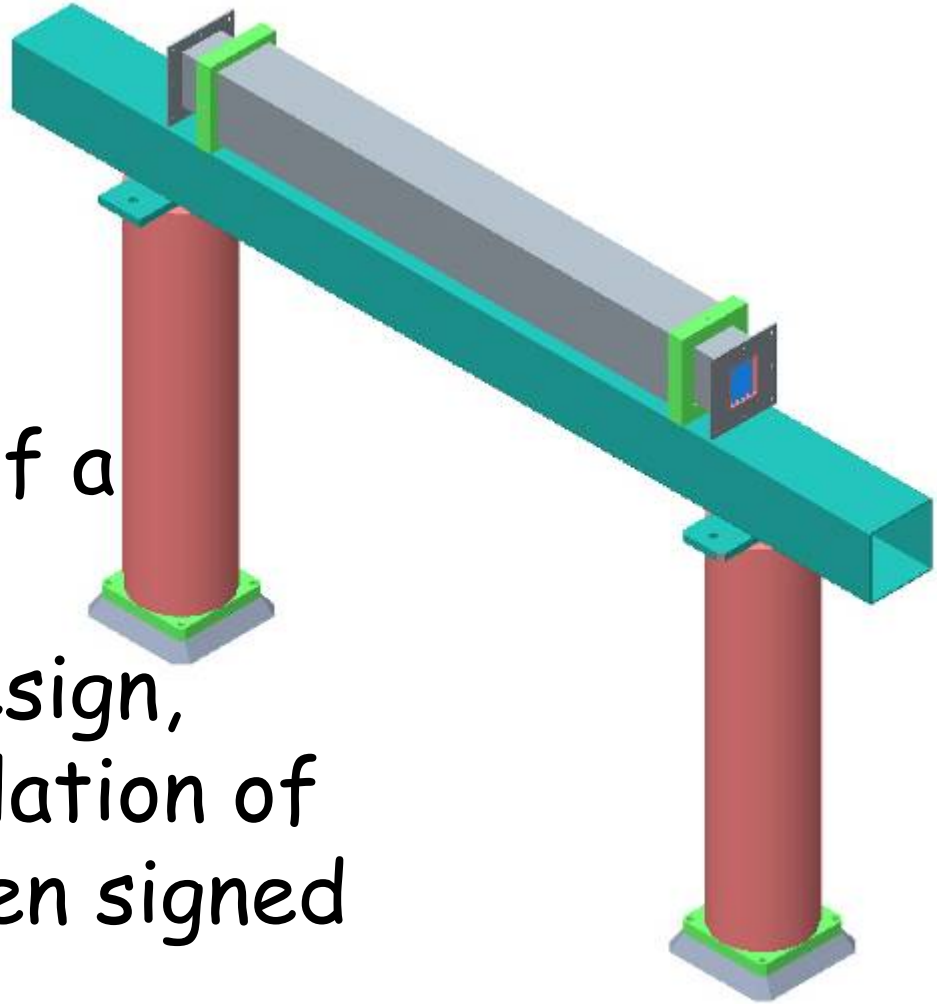

- This shows a sketch of a section of cold guide.
- A contract for the design, fabrication and installation of the cold guide has been signed with Mirrotron.
  - Completion is expected in late 2006

- We will use standard SNS choppers made by Mirrotron.
- The housings will specialized to eliminate several guide breaks and windows (similar to FP-6 design).

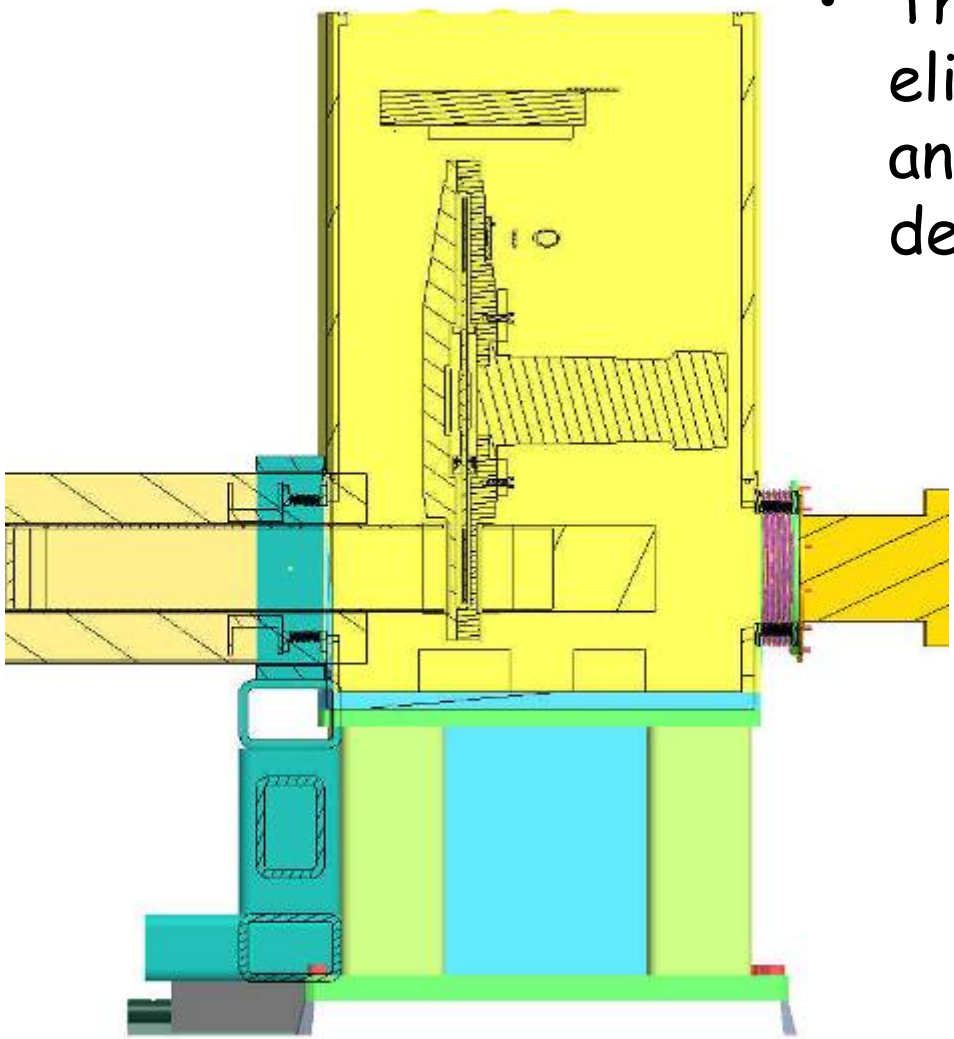

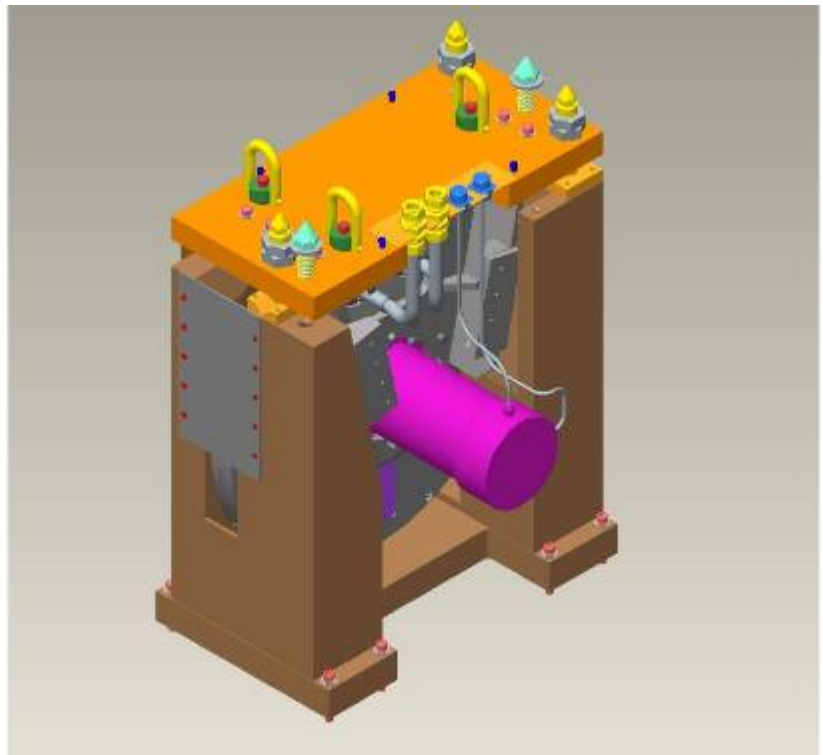

- The monochromators are made of alkali-intercalated graphite (see below).
- This technique was developed for the NIST measurement of the neutron lifetime using UCNs generated via 8.9Å incident on superfluid Helium.
- Two identical monochromators would necessarily bring the outgoing beam out parallel to the incoming beam.
- However, to conserve space for experimental apparatuses the UCN guide must hug the wall of our area.
- This bend (~9°) is expensive to achieve with neutron guide, but can be accomplished by changing the alkali species intercalated into the graphite.

Top View

Note: incoming and outgoing beams are not parallel.

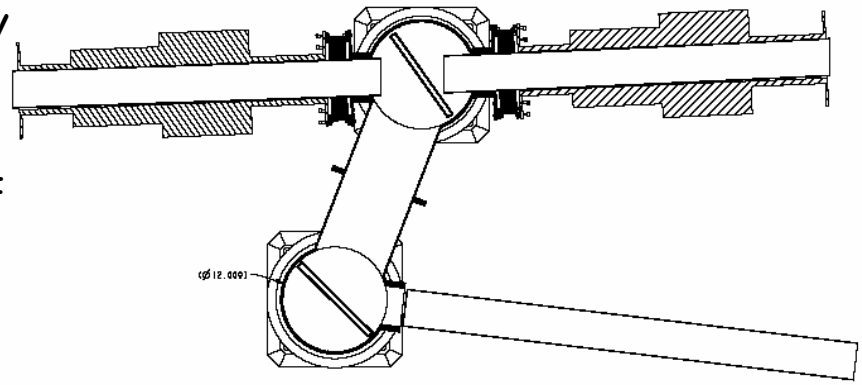

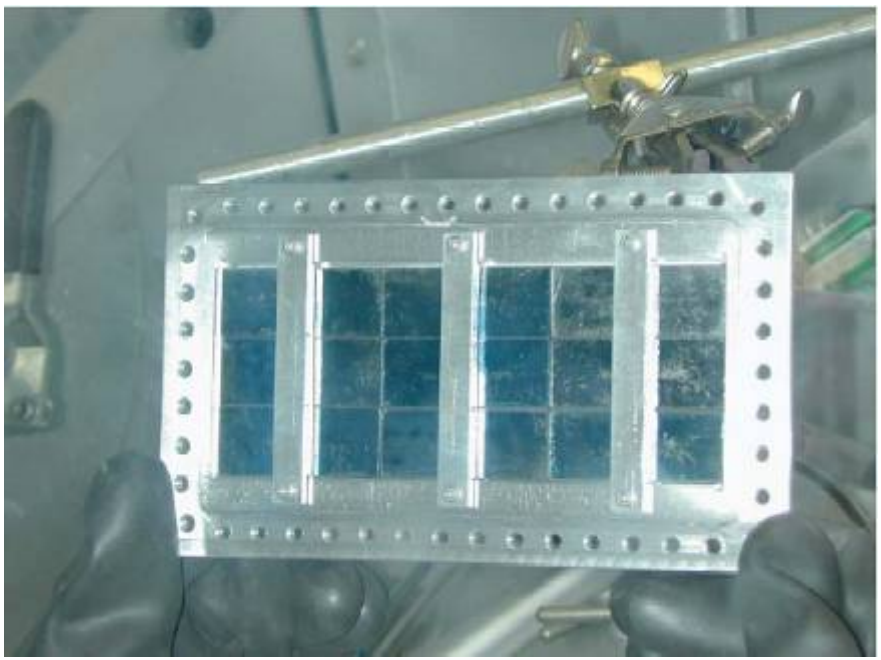

3D View

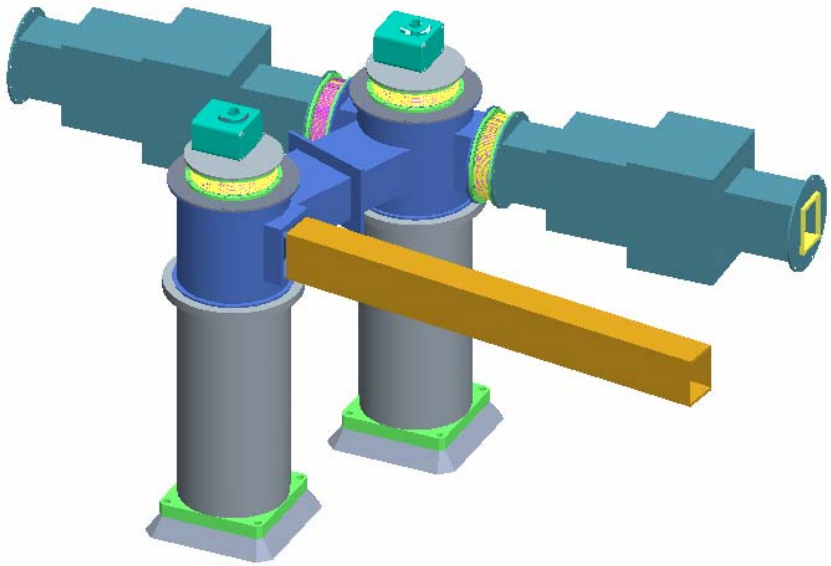

- This shows a top view of the external UCN facility with the current model of the neutron EDM apparatus.
- The dark grey floor areas correspond to an vibrationally-isolated slab on which detectors can be mounted.

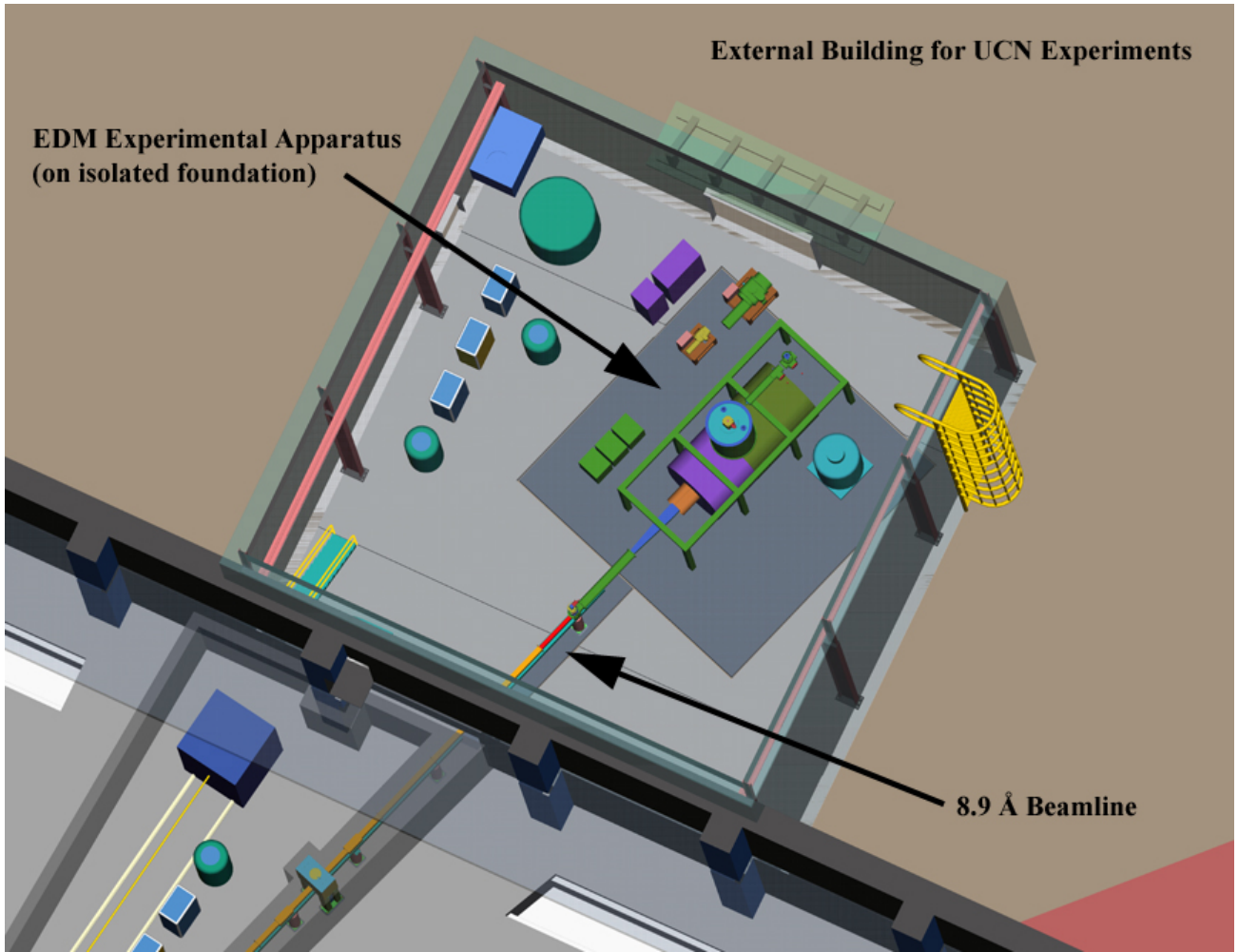

Performance

- The next few pages show simulation results for the beamlines' expected performance.
  - More details can be found in the simulation document linked to the FNPB home page.

- Neutron spectrum at the input to the FNPB neutron guide.
  - Long wavelength structure is artificial – bin aliasing combined with low statistics.

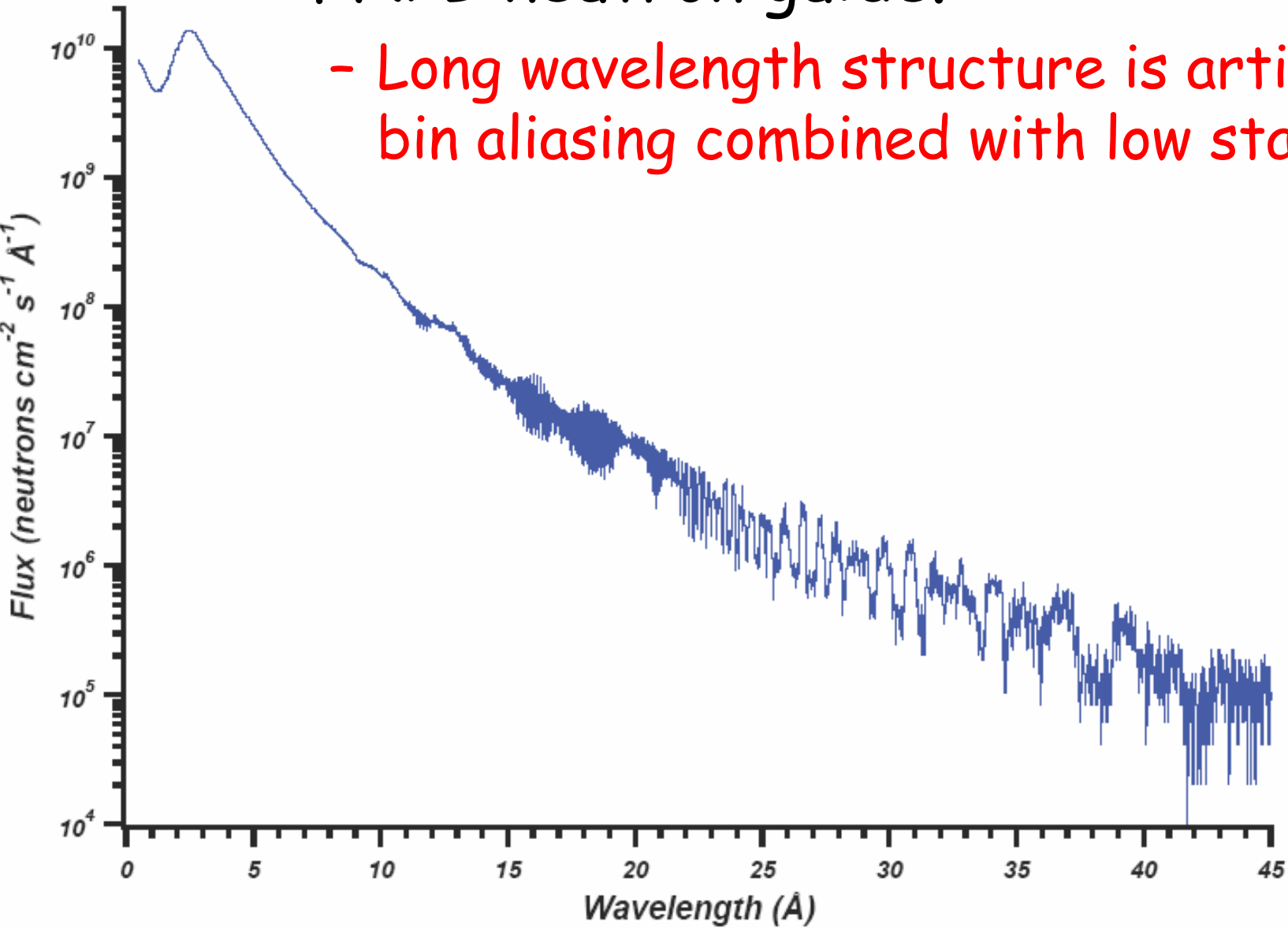

- Flux at the end of the cold beamline, 15m from the moderator.
  - Shown in red, grey and blue are three wavelength regions that can be selected by choppers to avoid both frame overlap and the "flash" from fast neutrons and γ's.
  - Choppers can be timed to access a higher flux region (crossing the red and grey areas) if the backgrounds are manageable.
  - Dips at 8.9/n Å are due to the double crystal monochromator that feeds the UCN line.

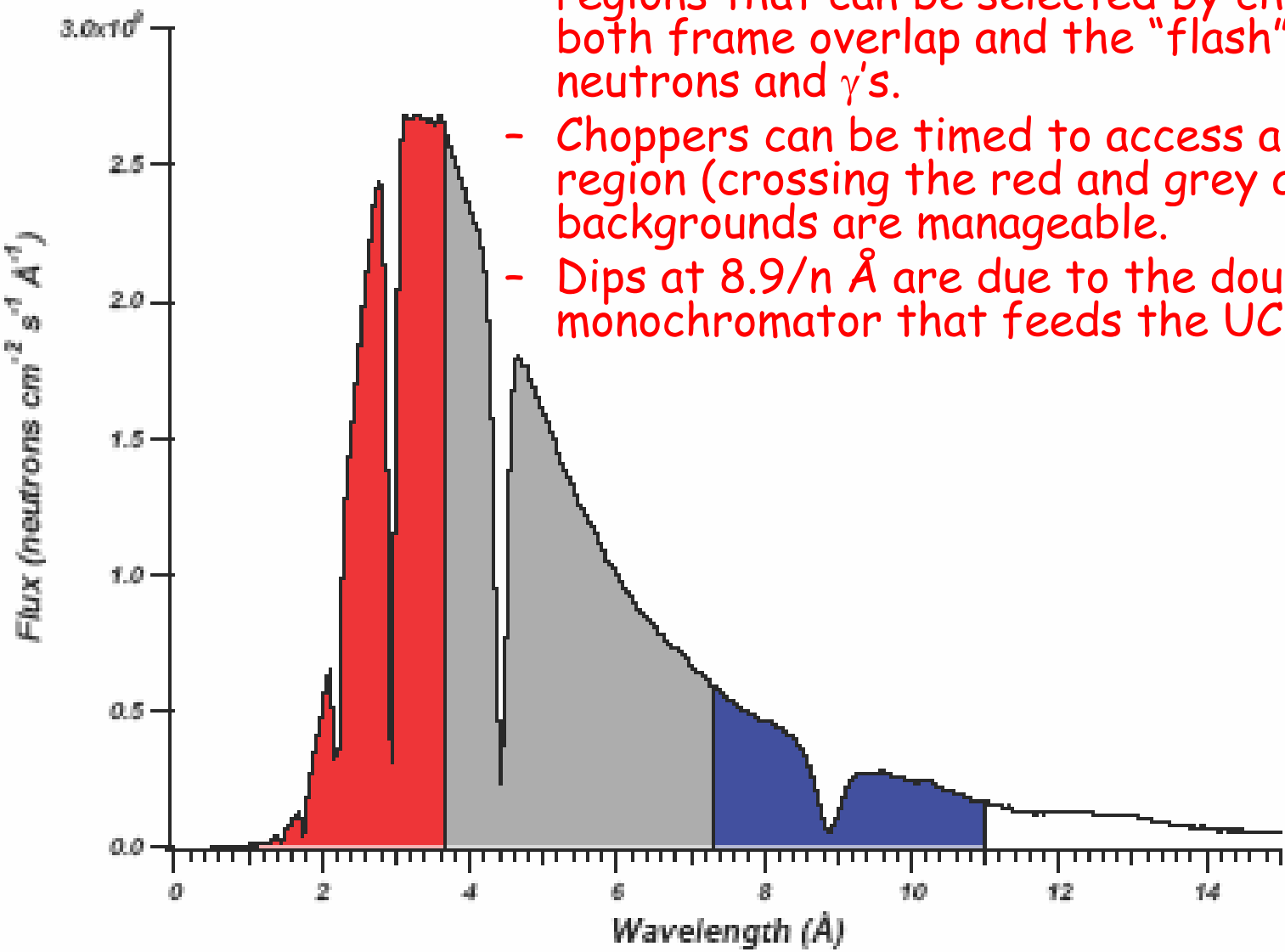

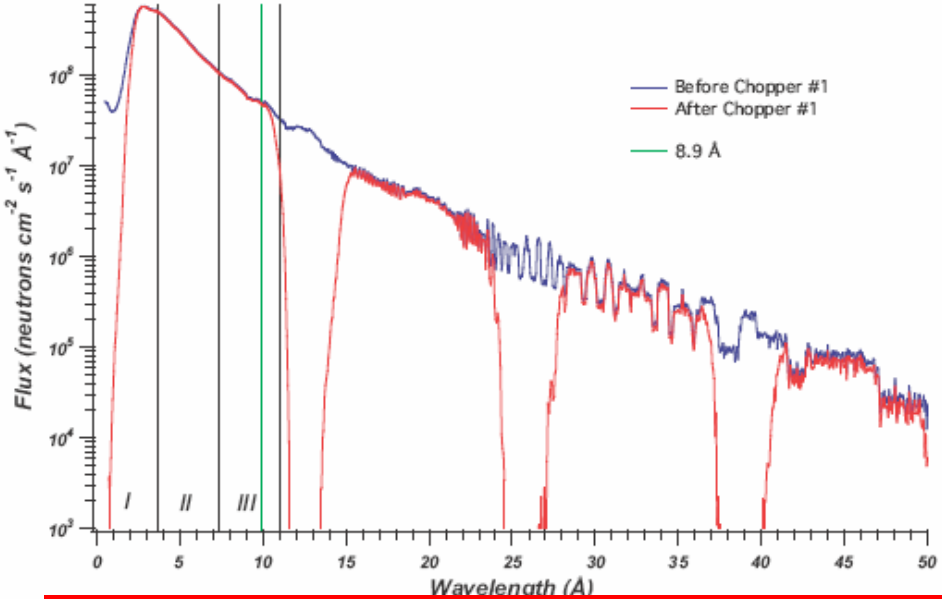

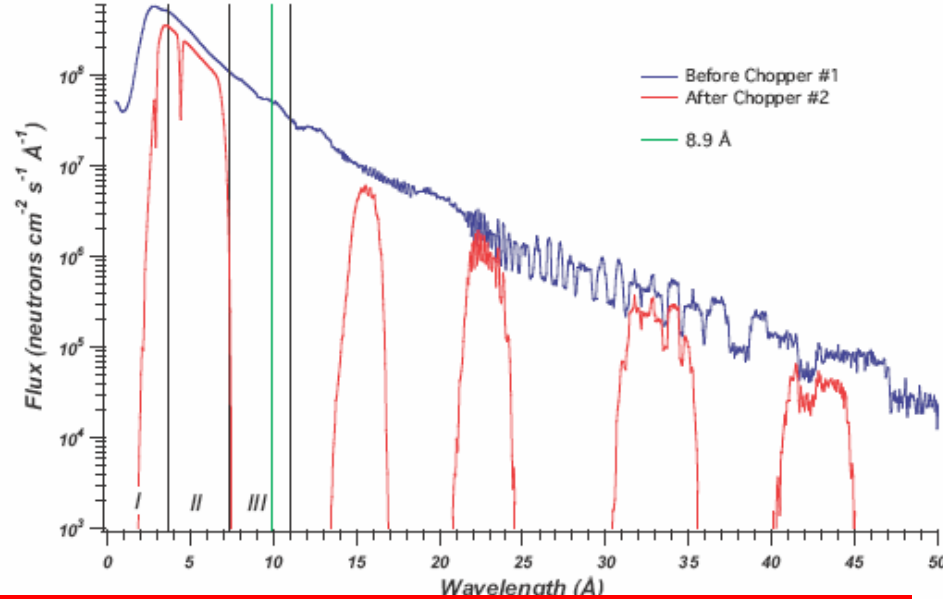

Accepted neutron spectra after each chopper. Note that 8.9Å neutrons pass through the first chopper for extraction to the UCN facility. In these simulations the choppers are phased to accept the region II wavelength band (grey on previous page).

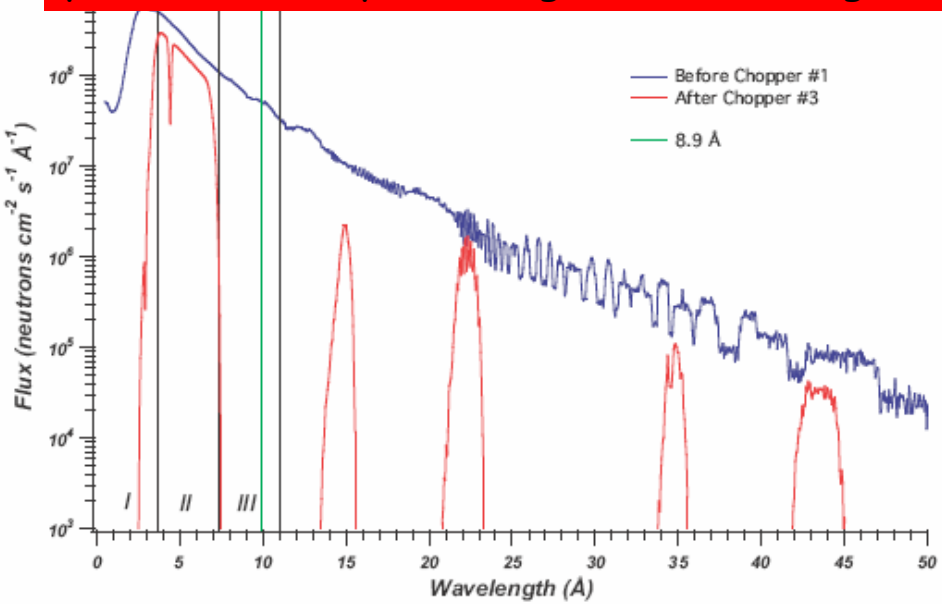

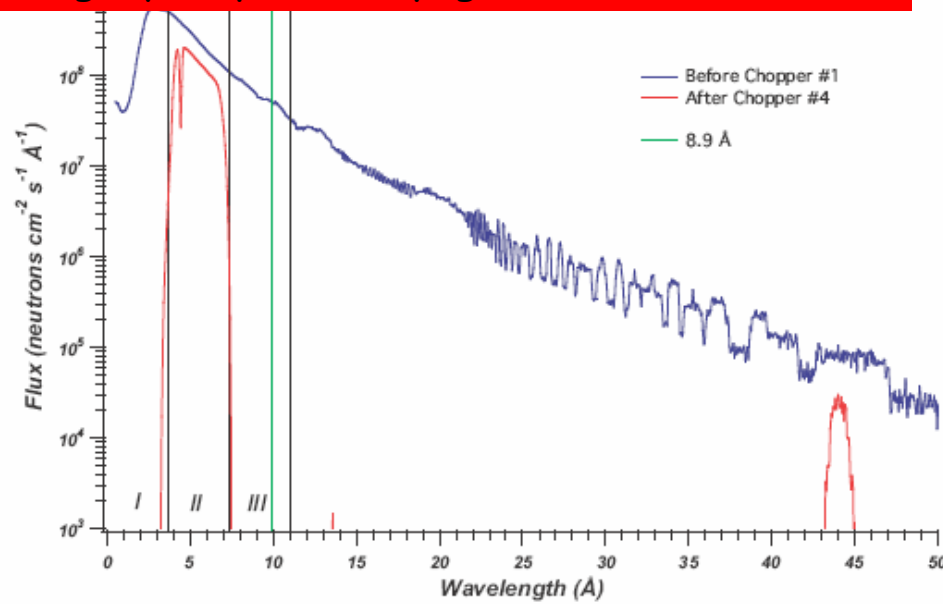

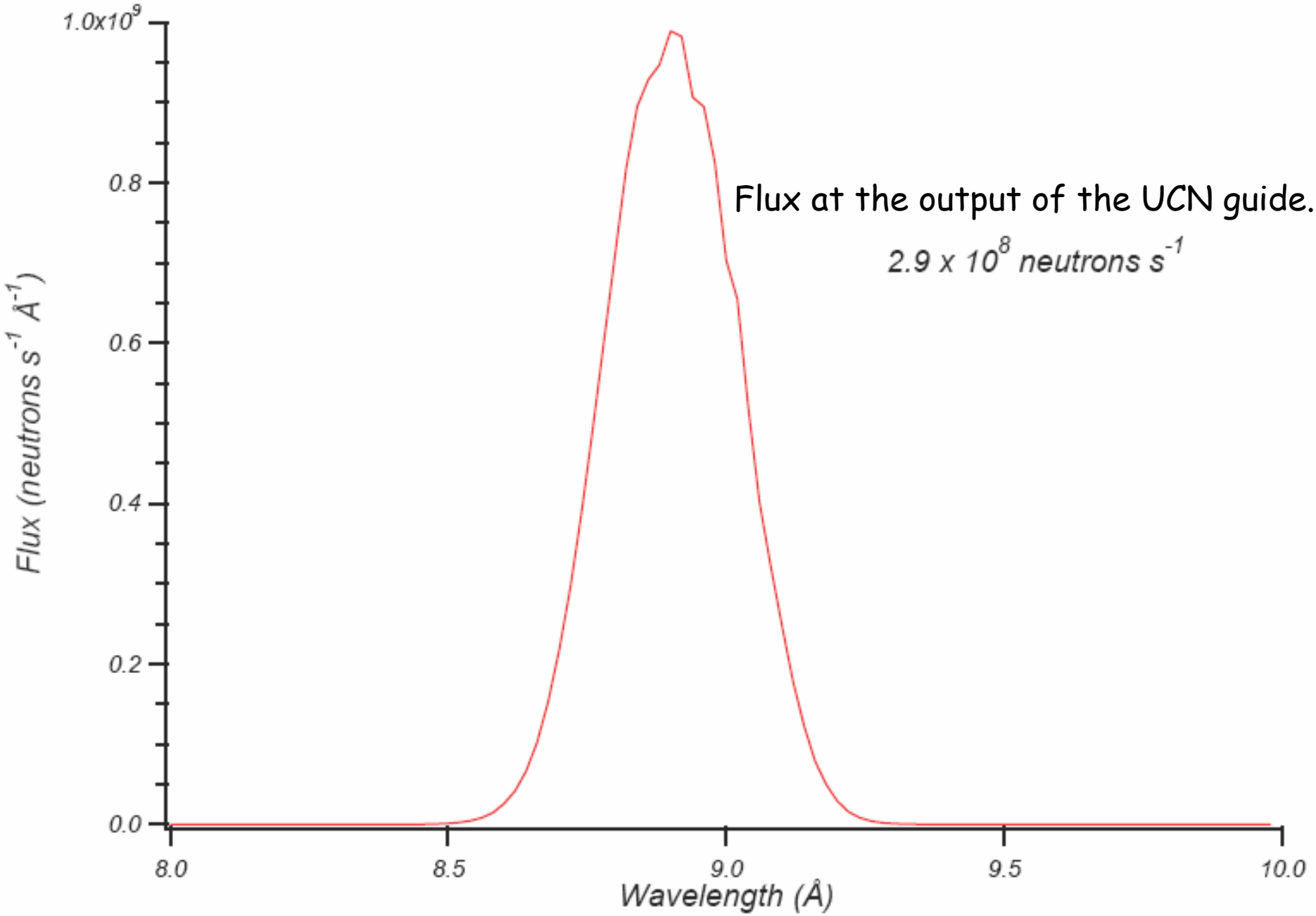
Flux at the output of the UCN guide.
2.9 x 10^8 neutrons s^-1
1.0x10^9
0.8
0.6
0.4
0.2
0.0
Flux (neutrons s^-1 Å^-1)
8.0
8.5
9.0
9.5
10.0
Wavelength (Å)