Advances in ISOL technology at IGISOL

J. Szerypo[1], A. Jokinen[1], V. S. Kolhinen[1], A. Nieminen[1], S. Rinta-Antila[1], J. Äystö[2]
[1] *Department of Physics, University of Jyväskylä, P.O. Box 35 (Y5), FIN-40351 Jyväskylä, Finland*
[2] *CERN, CH-1211 Geneva 23, Switzerland*

The IGISOL facility [1] at the Department of Physics of the University of Jyväskylä (JYFL) is delivering radioactive beams of short-lived exotic nuclei, in particular the neutron-rich isotopes from fission reaction. These nuclei are studied with the nuclear and collinear laser spectroscopy methods. In order to obtain a meaningful increase, in comparison to a standard level, of precision and sensitivity of such studies an improvement of the radioactive beam quality is necessary. This improvement will be achieved due to a radioactive beam handling which consists of three steps: beam cooling, bunching and (isobaric) purification. The latter means a possibility of obtaining a pure monoisotopic beam. Beam handling may be done with an aid of ion traps, in particular of RF and Penning type.

Cooling and bunching are performed with the use of an RFQ cooler/buncher [2]. It is essentially a classical RFQ mass filter filled in with a buffer gas (usually helium). There, an oscillating RF-field is confining the beam axially. At the same time, beam particles are thermalized by collisions with buffer gas. An outcome of this process is a substantial decrease of both transverse emittance and energy spread. The RFQ cooler/buncher was built at JYFL and works well several months already. First successful applications were on the collinear laser spectroscopy where large enhancement on sensitivity was achieved.

The isobaric purification will be made by a Penning trap [3] placed after the RF-cooler. It uses mass-selective buffer gas cooling technique. The latter needs creating a radiofrequency quadrupole field and presence of the buffer gas. The RF-frequency is chosen so that it is equal to the cyclotron frequency of the ions of interest, which are usually mixed with other, contaminating ions. The joint action of the RF-field and the buffer gas is cooling and centering the ions of interest on the trap axis, whereas contaminants are not centered. The ions of interest are then ejected through a small hole in the endcap of the trap. This process can have a high mass resolving power, of the order of 10^5, which permits to reject even isobaric contaminants. This trap is being assembled and tested now. Major part of related equipment, including B=7 T superconducting magnet, exists already.

This contribution describes the current status of the ion trap upgrade of the IGISOL facility and its future prospects. The latter comprise, apart from the experiments mentioned above, also precise nuclear mass measurements and nuclear spectroscopy in the Penning trap interior.

[1] P. Dendooven, Nuclear Instrum. and Methods **B126**, 182 (1997).
[2] A. Nieminen *et al.*, JYFL Annual Report 1998, 16 and Nuclear Instrum. and Methods **A** (2001), in print.
[3] J. Szerypo *et al.*, JYFL Annual Report 1999, 19.

Negative Ion Beam Production by Sequential Charge Transfer in Tandem Mg and Cs Vapor Cells

X. Zhao, V. Ryjkov, J. Lassen, Xi Li, and H. A. Schuessler
Department of Physics, Texas A&M University,
College Station, Texas 77843-4242, USA

Ion beams produced at an ISOL facility are usually positively charged. However the HRIBF at Oak Ridge National Laboratory requires negative radioactive ion beams for injection in the tandem accelerator. A general way applicable to many elements is to change the positive ion beam into a negative ion beam by charge exchange in a suitably chosen gaseous medium. In this case, the charge exchange is a two step process where the electron transfers first produce neutral atoms and then negative ions. An experimental challenge in this connection is to produce a negative ion beam with a small emittance by optimizing the selection and the thickness of the charge exchange medium. For the example of producing a low emittance negative As beam, experiments were carried out at UNISOR with either Mg or Cs vapors as the charge exchange medium. The corresponding charge exchange rates were measured for different As beam energies and the resulting beam divergences were estimated via the intensity decrease of the transmitted beams. While both vapor targets produced negative ions, Mg was shown to be an excellent medium for making the first step namely neutral beams, and Cs for making the second step namely negative ion beams from neutral beams. This is due to their difference in ionization potentials and electron affinities. The results of the measurements suggested the application of two charge exchange cells placed one after the other, with Mg vapor in the first cell and Cs vapor in the second. This arrangement was implemented and the tandem arrangement resulted in the minimum target beam divergence for producing negative As beams. Experimental results and rate equations describing the two step charge exchange processes are discussed. The experiment demonstrated the advantage of properly choosing projectile-target combinations with minimum energy defects .

The beam diagnostics systems of the EXCYT facility at LNS

L.Cosentino, P.Finocchiaro
INFN Laboratori Nazionali del Sud, Catania, Italy

EXCYT (EXotics with CYclotron and Tandem) is the ISOL facility under development at INFN - LNS Catania (Italy) [1], for the production of radioactive beams with energies ranging from 0.2 up to 8MeV/A, emittance less than 1π mm·mrad and energy spread less than 10^{-4}. The primary beam (E ≤ 80MeV/A, A<48) is accelerated by the superconducting cyclotron (CS) and transported onto a graphite thick target, from which the radioactive ions of interest are extracted and then selected by a high resolution magnetic isobar separator (ΔE/E = 1/20000), which rejects the isobaric contaminants. After the separator the beam has a kinetic energy of 300keV and can be accelerated by the 15MV Tandem. The beam intensity is expected to be in the range from 10^3 pps up to 10^9 pps, depending on the intensity of the primary beam (< 1pμA), on the production cross section in the target and on the overall extraction efficiency from the source.

In order to have a suitable check of the beam properties (profile, intensity, ion composition, etc.) for the beam tuning requirements, the facility needs an efficient beam diagnostics. Taking into account the peculiarities of the beams, we have developed a series of diagnostics devices based on particle detectors, like scintillators, semiconductors and gas chambers [2]. The device for the beam imaging is based on a CsI(Tl) scintillator plate and exploits the radioactive decay (mainly β and γ) of the ions, in order to produce a light spot which represents the transversal profile of the beam. In the same device a couple of germanium detectors should recognize the nuclides present in the beam, by acquiring their energy gamma spectrum. Concerning the beam pipe after the tandem accelerator, devices based on a high resolution silicon telescope that can revolve around a target, will be installed. They are able to identify the beam nuclear species by means of scatter plots.

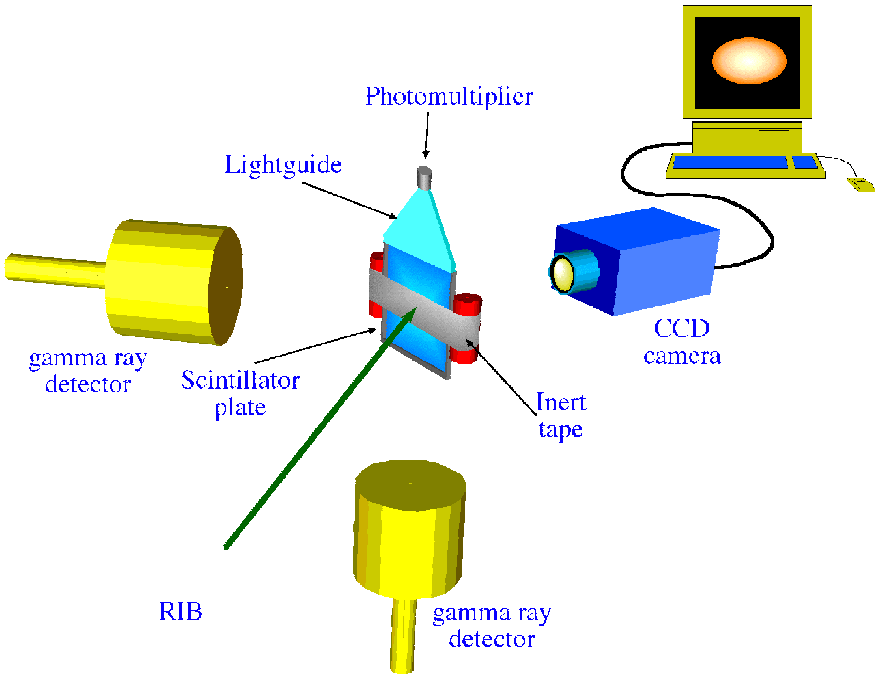

Sketch of the device for beam imaging and identification.

[1] G. Ciavola et al., Nuclear Physics A616 (1997) 69c-76c.
[2] P. Finocchiaro, CAARI 98, 15th Internat. Conf. on the Appl. of Accel. In Research and Industry, Univ. of North Texas Denton, November 4-7, 1998.

Acceleration of Radioactive Ions with REX-ISOLDE

F. Ames[1,2] for the REX-ISOLDE collaboration[2]
[1]Sektion Physik, LMU München, D-85748 Garching, Germany
[2]CERN, CH-1211 Geneva, Switzerland

The ISOLDE facility placed at CERN, Geneva has been successfully used for the production of radioactive ions since more than 30 years. Until now the beam energy available is at 60 keV. The aim of REX - ISOLDE (Radioactive beam EXperiment at ISOLDE) is to overcome this and to post - accelerate light ($A \leq 50$) radioactive ions up to an energy of 0.8 - 2.2 MeV/u. At this energy coulomb excitation and particle transfer reactions can be used to study nuclear structure far of stability. For many cases this will be done via γ -spectroscopy with the MINIBALL, a 4π Ge detector array. First experiments plan to investigate neutron rich isotopes near to the magic neutron numbers 20 and 28. Beside this, measurements in astrophysics, atomic physics and solid state physics are planed. They will make use either of the availability of having highly charged radioactive ions or the high and variable energy of them.

The setup is shown in figure 1. A unique system for beam preparation is used. It consists of a Penning trap for beam accumulation and bunching and an electron beam ion source (EBIS) for charge breeding, which can deliver a very clean beam of bunches of highly charged radioactive ions. An additional advantage is the fast breeding time to reach an A/q value of about 4.5, which is necessary for the accelerating structures. For isotopes below A=50 the required charge state can be reached within less than 20 ms. This enables it to handle also short-lived isotopes. After a mass separator to choose the right A/q value a linear accelerator formed by an RFQ, an IH structure and three 7-gap resonators is used to accelerate the ions. Finally there are two target and detector stations, one for the installation of the MINIBALL and one for other experiments.

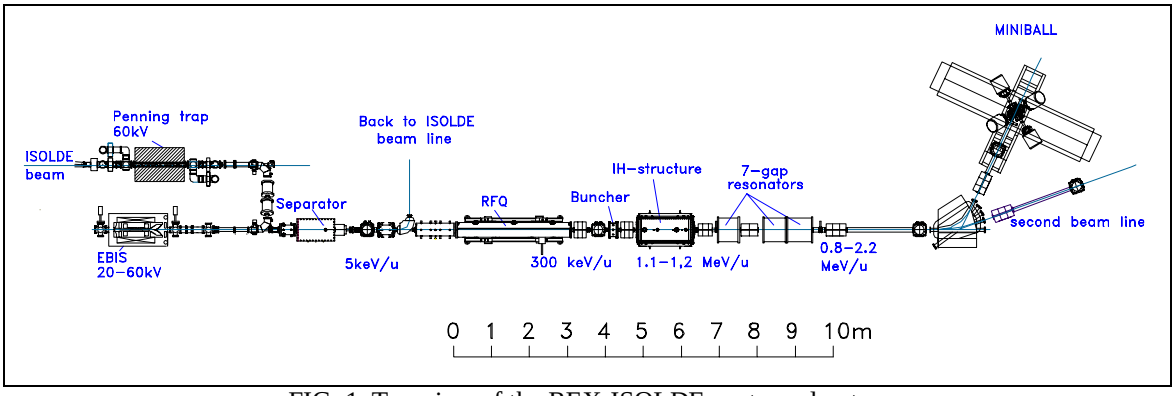

FIG. 1. Top view of the REX-ISOLDE post accelerator.

All components of the set-up are finished, tested and most of them are already installed at the ISOLDE facility. The accumulation, cooling and bunching of ions delivered by ISOLDE, has been demonstrated with the Penning trap. Acceleration up to 300 keV/u of ion bunches delivered by the EBIS with the RFQ has been successfully carried out. The status of the commissioning of the whole installation, especially the interplay of the different components will be presented.

The Radioactive Ion Beam Accelerator MAFF at the Munich High Flux Reactor FRM-II

W. Assmann[1], O. Engels[1], T. Faestermann[2], M. Groß[1], D. Habs[1], O. Kester[1]
H.J. Körner[2], H.J. Maier[1] and P.G. Thirolf[1]
for the MAFF collaboration
[1] Sektion Physik, LMU München, Am Coulombwall 1, 85748 Garching, Germany
[2] TU München, James Franck Str., 85748 Garching, Germany

At the Munich high flux reactor FRM-II the Munich accelerator for fission fragments (MAFF) is under design [1,2] in order to produce intense beams of very neutron-rich fission fragments of up to 10^{12} particles/s. Thermal neutron induced nuclear fission is the most suitable method to produce neutron-rich isotopes (70<A<160) due to the large fission cross section and the high thermal neutron fluxes in modern reactors. The beams at MAFF will be delivered to experiments at low energy (30 keV) as well as at high energies between 3.7 and 5.9 MeV/u. The neutron rich isotopes are of interest in many different fields of nuclear physics, astrophysics, solid state physics and medicine. One of the key experiments will be the production and the study of the nuclear and atomic properties of very heavy elements with Z>100. An overview of the production method of neutron rich isotopes by thermal neutron induced fission, of the machine layout and of the experiments will be shown.

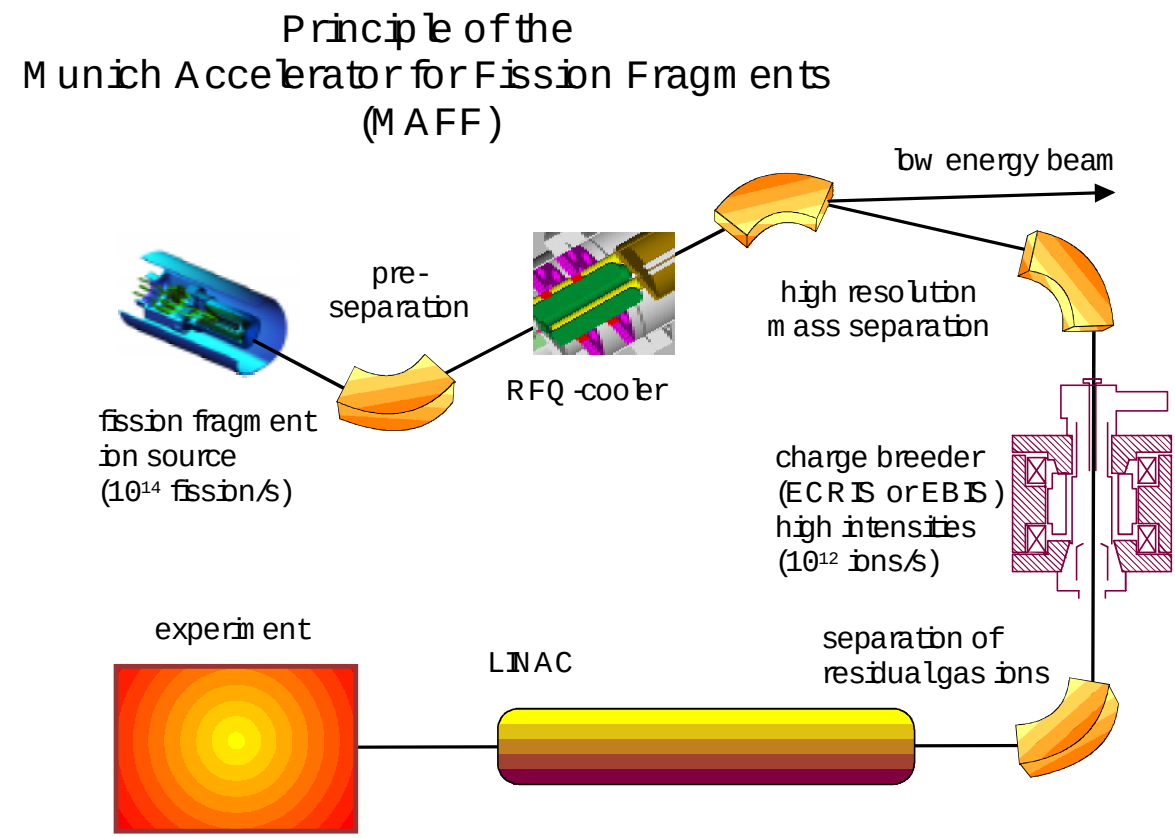

FIG. 1. Schematic of the MAFF layout.

[1] O. Kester et al., Nucl. Instr. and Meth. B 139 (1998) 28-36
[2] MAFF - Physics Case and Technical Description,
(http://www.ha.physik.uni-muenchen.de/maff/)

Nuclear reaction modeling for RIA ISOL target design

S.G. Mashnik, M.B. Chadwick, H.G. Hughes, E.J. Pitcher, R.E. Prael,
D.J. Vieira, L.S. Waters, and W.B. Wilson
Los Alamos National Laboratory, Los Alamos, NM 87545,USA

Los Alamos scientists are collaborating with researchers at Argonne and Oak Ridge on the development of improved nuclear reaction physics for modeling radionuclide production in ISOL targets. This is being done in the context of the MCNPX simulation code, which is a merger of MCNP and the LAHET intranuclear cascade code, and simulates both nuclear reaction cross sections and radiation transport in the target. The CINDER code is also used to calculate the time-dependent nuclear decays for estimating induced radioactivities. We will give an overview of the reaction physics improvements we are addressing, including intranuclear cascade (INC) physics, where recent high-quality inverse-kinematics residue data from GSI have led to INC spallation and fission model improvements; and preequilibrium reactions important in modeling (p, xn) and $(p, xnyp)$ cross sections for the production of nuclides far from stability.

Rare Beam Production below the Fermi Energy at Texas A&M. *

G. A. Souliotis, M. Veselsky, G. Chubaryan, L. Trache, A. Keksis, E. Martin, A. Ruangma, E. Winchester and S. J. Yennello.
Cyclotron Institute, Texas A&M University, College Station, Texas, 77843.

The possibility of rare isotope production around and below the Fermi energy regime is investigated using the MARS recoil separator at TAMU. The reaction of 20 MeV/nucleon ^{78}Kr on ^{27}Al is employed for the production of proton rich nuclides (especially N=Z). For neutron rich nuclides, the reaction of 20 MeV/nucleon ^{86}Kr on ^{64}Ni is utilized. In addition, the fission of ^{238}U projectiles at 10 MeV/nucleon following interaction with a ^{64}Ni target is explored as a source of extremely neutron-rich nuclei. The experimental results on rates of rare isotopes will be presented and compared to results of reaction simulations. Apart from in-flight possibilities, the option of utilizing such reactions (in normal or inverse kinematics) at these or lower energies for rare isotope production in ISOL-based facilities will be discussed. Finally, possible application of such reactions in current plans of ISOL-type rare beam production at TAMU will be mentioned.

*This work was supported in part by the NSF through grant No. PHY-9457376, the Robert A. Welch Foundation through grant No. A-1266, and the Department of Energy through grant No. DE-FG03-93ER40773.

Photofission for the SPIRAL II Project

E. Baron[*], B. Blank, D. Guillemaud-Mueller[#], T. Junquera[#], F. Loyer*, D. Ridikas[f], M.-G. Saint-Laurent[*], D. Soulatges[*], H. Safa[f],

[*]GANIL, 14076 Caen, France
[#]IPN, 91406 Orsay, France
[f]CEA Saclay, 91191 Gif/Yvette, France

Abstract :

The SPIRAL II project at GANIL is aiming at a significant enhancement in the production of some exotic ion over the current state of the art. One very attractive option is the use of a rather compact electron accelerator, taking benefit of the giant dipolar resonance in uranium through photofission. In this paper, a possible layout for the driver accelerator and a preliminary design of the target is sketched. Target calculations including Bremsstrahlung photon spectra and nuclear reactions are presented giving the expected number of fission per second and the corresponding neutron flux. Hence, the estimated exotic beam in-target production is deduced for some typical radioactive neutron rich ions.

RADIOACTIVE ION BEAMS PRODUCTION WITH PHOTOFISSION OF URANIUM ISOTOPES.

T. Khazratov, A.Khamrakulov

(Samarkand state University, Uzbekistan)

The use of a radioactive beam of ions with neutron excess higher than in the stable ^{48}Ca nucleus could solve the problem. Reactions of cold fusion between massive nuclei with masses and charges close to those of fission fragments may turn to be promising for these purposes.

To make the picture complete, note that it is possible to use extremely expensive, but very convenient photofissions on ^{238}U and ^{235}U.

The yield photofissions ^{238}U and ^{235}U fragments was determined experimentally at a beam of electrons produced by the compact accelerator of the microtron type MT-22S.

The facility MT-22S produces a beam of electrons with an energy E_e=13-22 Mev and intensity of 20 μA. A W plate 2 mm in thickness was used a convertor.

A standard "sandwich" consisting of then U_2O_3 layer deposited on an Al (20μm) backing and a plastic track detector (Mylar-50 μm) was used for the fission fragment registration. Pb plates of various thick nesses imitating the solid U-target were placed in between the "detector sandwiches".

It is shown that in the interaction between an electron beam (22 Mev and 20μA in intensity) and uranium target of about 40 g/cm^2 in thickness, an average of $1{,}3\cdot10^{10}$ fission events/second is generated.

According to the calculations and test experiments, this corresponds to the yield of ^{132}Sn and ^{142}Xe isotopes of approximately-10^8/s.

The photofission reactions of a heavy nucleus are compared with other methods of radioactive beams production of medium mass nucleus.

Ion source development of the on-line isotope separator at JAERI*

S.Ichikawa, A.Osa, K.Tsukada, M.Asai, and Y.Nagame

Japan Atomic Energy Research Institute, Tokai-mura, Ibaraki 319-1195, Japan

The JAERI on-line isotope separator (JAERI-ISOL) [1] at Japan Atomic Energy Research Institute, Tokai, is utilized to search for new isotopes and to investigate spectroscopic studies for nuclei far from stability. So far, two type of ion sources have been developed – a cavity type thermal ion source and a gas-jet coupled thermal ion source [2]. Both sources can give high ionization efficiencies for lanthanide and actinide atoms. With the previously established ion-source technique using mono-oxide ion formation in the thermal ion source [3], the new isotopes ^{121}La, ^{125,127}Pr were identified in heavy-ion fusion residues [4,5]. Further, with the gas-jet coupled thermal ion source, the new isotopes ^{159}Pm, ^{161}Sm, ^{165}Gd, ^{166,167,168}Tb produced in the proton-induced fission of ^{238}U have been identified [6].

Thereafter, to extend our investigation to the actinide region, the mass-separation of neutron-deficient americium and curium isotopes produced via ^{233,235}U(^{6}Li,*x*n), ^{237}Np(^{6}Li,*x*n) reactions was attempted. For effective transport of actinide atoms from the target chamber to the thermal ion source, we developed a gas-jet coupled multiple-target chamber. This chamber can be set about 20 target foils, thus, the effective target thickness of about 2 mg/cm^2 is achieved. Then, we successfully applied to the identification of the new isotope ^{236}Am produced in the ^{235}U(^{6}Li,5n) reaction [7].

To further the study of more neutron-deficient americium and curium isotopes, ^{233,234,235}Am, ^{237}Cm whose production cross sections are estimated to be 1-10 μb in ^{233,235}U(^{6}Li,*x*n) reactions and 1 μb in ^{237}Np(^{6}Li,6n) reaction, respectively, we needed the improvement of the overall efficiency and the stable operation of the ion source for long time without serious restrictions. The overall efficiency of 0.3-0.4% including ionization efficiency and transport one of the gas-jet system for americium atoms was achieved by using the He/PbI_2 aerosol jet system. A long operation of the whole system was examined in on-line experiment for the mass separation of ^{235}Am produced in the ^{235}U(^{6}Li,6n) reaction. The beam intensity of ^{235}Am was stable during the experiment. This indicates that the ion source can be stably operated for 100 h or more. The performance of the present system was demonstrated in an identification of the new americium isotope ^{233}Am [8].

This contribution describes the performance of the multiple-target He/PbI_2 aerosol jet system coupled with the thermal ion source used for the mass-separation of americium and curium isotopes produced in ^{233,235}U(^{6}Li,*x*n), ^{237}Np(^{6}Li,*x*n) reactions. The identification of the new neutron-deficient ^{233}Am [8] and ^{237}Cm isotopes with this system is also presented. In addition, the future plan using an integrated target-FEBIAD-type ion source and a surface ionization type one designed for mass separation of neutron-rich isotopes produced in the proton-induced fission of ^{238}U will be introduced.

[1] S. Ichikawa *et al*., Nucl. Instr. Meth. B **70**, 93(1992).
[2] S. Ichikawa *et al*., Nucl. Instr. Meth. A **374**, 330(1996).
[3] S. Ichikawa *et al*., Nucl. Instr. Meth. A **274**, 259(1989).
[4] T. Sekine *et al*., Z. Phys. A **331** ,105(1988).
[5] A.Osa *et al*., Nucl. Phys. A **588**, 185c(1995).
[6] M.Asai *et al*., Phys. Rev. C **59**,3060(1999).
[7] K.Tsukada *et al*., Phys. Rev. C **57**, 2057 (1998).
[8] M.Sakama *et al*., Eur. Phys. J. A **9**,303(2000).

*This work was supported in part by the JAERI-University Collaborative Research Project.

Rate Measurements of Radioactive Neutron Rich Beams Produced via Proton Induced Fission at HRIBF

M. N. Tantawy,[1] J. C. Batchelder, H. K. Carter, G. Spejewski,[2] R. Welton, D. E. Mueller, R. L. Auble, J. R. Beene, D. Stracener,[3] D. J. Hartley, C. R. Bingham[1] K. Tsukada,[4]

[1] *University of Tennessee,Knoxville, TN 37996,USA*

[2] *Oak Ridge Institute for Science and Education, Oak Ridge, TN 37831, USA*

[3] *Physics Division, Oak Ridge National Laboratory, Oak Ridge, TN 37831, USA*

[4] *Japan Atomic Energy Research Institute,Japan*

A systematic study of the rates of radioactive nuclei produced via fragmentation was performed at the Holifield Radioactive Ion Beam Facility (HRIBF). A Uranium Carbide target was bombarded with a 20 MeV proton beam with an intensity of 2 μA. Fission fragments were produced and separated by the ISOL technique, and then implanted on a moving tape and transported to a Ge detector. Rates of individual species from A=78 to 145 will be presented.

Ion Sources used in the Production of Radioactive Ion Beams at the HRIBF

G.D. Alton[1], R.L. Auble[1], J.R. Beene[1], H.K. Carter[2], D.T. Dowling[1], J.W. Hale[1], J. Kormicki[2], Y. Liu[1], G.D. Mills[1], P.E. Mueller[1], S.N. Murray[1], D.E. Pierce[1], C.A. Reed[2], D.W. Stracener[1], B.A. Tatum[1], R.F. Welton[1], and C.L. Williams[2]

[1] *Physics Division, Oak Ridge National Laboratory,* Oak Ridge, TN 37831, USA*

[2] *Oak Ridge Institute for Science and Education,† Oak Ridge, TN 37831, USA*

Radioactive ion beams are produced at the Holifield Radioactive Ion Beam Facility (HRIBF) using the ISOL technique where the atoms are produced in a thick target, transported to an ion source, ionized, and extracted from the ion source to form an ion beam. At the HRIBF, the radioactive ion beams thus produced are accelerated to 200 keV for injection into a tandem electrostatic accelerator, further accelerated up to a few MeV per nucleon, and then delivered to experimental stations for use in nuclear physics and astrophysics studies. The radioactive nuclei are produced via light ion (p, d, ^{3}He, α) induced reactions on the target nuclei. These production beams are provided by a K=100 cyclotron. To date, the production beam intensities have been limited to 12 μA by the ability of the production target to withstand the deposited power.

The types of ion sources used to produce radioactive ion beams vary considerably. Since negative ions are required for injection in the tandem accelerator, most of the ion source development effort has been focused on improving the efficiency and durability of sources that produce negative ions directly. Three such sources have been used at the HRIBF to produce radioactive ion beams, either on the RIB Injector Platform or during tests with low-intensity production beams at the UNISOR Facility. In some cases, where the electronegativity of the element is relatively low, it is more efficient to make positively charged ions and then create negative ions by passing the low-energy positive-ion beam through a charge exchange cell containing a metal vapor. At the HRIBF a cesium-vapor cell is used. The ion sources used at the HRIBF are listed below.

- Kinetic Ejection Negative Ion Source (KENIS) [1] – used to produce beams of ^{17,18}F from targets of aluminum oxide and hafnium oxide fibers.
- Electron Beam Plasma Ion Source (EBPIS) [2] – used to produce positive-ion beams of proton-rich isotopes of As, Ga, and Cu using liquid metal targets and F from fibrous oxide targets. Also used to make beams of many fission fragments produced in a uranium carbide target.
- Batch-mode Cs-sputter ion source [3] – used to produce beams of long-lived nuclei from solid targets.
- Negative Surface Ionization Source [4] – utilizes a LaB_6 surface to produce negative ions of bromine and iodine from a uranium carbide target.

The poster presentation will provide more information on each of these sources, including the unique capabilities of each and their usefulness to the HRIBF.

[1] G.D. Alton, Y. Liu, C. Williams, and S.N. Murray, *Nucl. Instr. and Meth.* **B 170**, 515-522 (2000).

[2] Carter, H.K., et al., *Nucl. Instr. Meth.* **B 126**, 166 (1997). (Lists of extracted beams and the measured intensites are available at www.phy.ornl.gov/hribf/users/beams/).

[3] G.D. Mills, G.D. Alton, D.L. Haynes, and J.R. Beene, *Physics Division Progress Rpt. ORNL-6957, Sept. 1998* (available at www.phy.ornl.gov/progress/hribf/randd/hri031.pdf).

[4] H. Zaim, Y. Liu, S.N. Murray, and G.D. Alton, to be published in *Application of Accelerators in Research and Industry*, edited by J. L. Duggan and I. L. Morgan, AIP Conference Proceedings, New York: American Institute of Physics, 2001.

---

* Managed by UT-Battelle, LLC, for the U.S. Department of Energy under contract DE-AC05-00OR22725.

† Managed by Oak Ridge Associated Universities, for the U.S. Department of Energy under contract DE-AC05-00OR22750.

Negative Ion Beam Cooling Using a Collisional RF Quadrupole Ion Guide

Y. Liu, J. F. Liang, G. D. Alton, J. R. Beene
Physics Division, Oak Ridge National Laboratory[*]
Oak Ridge, TN 37831, USA

H. Wollnik and Z. Zhen
Justus-Liebig-Universität, 35392 Giessen, Germany

The Holifield Radioactive Ion Beam Facility (HRIBF) uses the Isotope Separator On-Line (ISOL) technique to provide accelerated radioactive ion beams (RIBs) for nuclear structure physics and nuclear astrophysics research. The radioactive ion beams produced are often mixed with isobaric contaminants that compromise experimental results. At the HRIBF, a magnetic mass separator with a nominal mass resolving power of $M/\Delta M$ ~20,000 is provided for isobaric purification. However, in order to achieve this high resolving power in practice, a very high quality beam (one with a very small emittance and energy spread) is required. The tandem accelerator at the HRIBF requires negatively charged ions as input. Negative-ion beams are most often generated in Cs-sputter sources or by means of charge conversion of positive-ion beams. In both cases, the resulting negative-ion beams have inherently large emittances due to the large energy spreads associated with the energetic sputtering or charge transfer processes. Thus, the degree of isobaric purification that otherwise could be obtained is limited by the rather poor qualities of negative beams from these sources.

We have investigated the feasibility of cooling negative ion beams by injecting them into a gas-filled RF quadrupole ion guide where their energies are dissipated in collisions with a buffer gas. After reaching thermal energy distributions with the buffer gas, the ions can be re-accelerated to form beams with the qualities required for effective mass resolution of contaminant and beams of interest. The objective of the present studies was to develop a system and evaluate its feasibility for cooling negative RIBs to achieve beam qualities required for eliminating contaminant isobars through magnetic analysis without sacrificing intensity. To this end, we have constructed an ion cooler, consisting of a deceleration stage, a gas-filled RF quadrupole, and a re-acceleration stage, and used it to cool negative-ion beams with initial energy distributions >10 eV to energy spreads ~2 eV with an overall transmission efficiency of ~17% for F^- beams. A detailed description of the collisional cooler and results derived from cooling experiments with both negative- and positive-ion beams will be presented.

[*] Managed by UT-Battelle, LLC, for the U.S. Department of Energy under contract DE-AC05-00OR22725.

A New Concept Kinetic-Ejection Negative-Ion Source for Rib Generation

G. D. Alton,[1] Y. Liu,[1] C. Williams[2] and S. N. Murray[1]

[1]*Physics Division, Oak Ridge National Laboratory,*[*] *Oak Ridge, TN 37831-6368 USA*

[2]*Oak Ridge Institute for Science and Education,*[†] *Oak Ridge, TN 37831 USA*

Chemically active radioactive species are often released from target materials in a variety of molecular forms. For example, ^{17}F is principally released from Al_2O_3 target material as $Al^{17}F$. Because of the low probability of simultaneously dissociating such molecular carriers and efficiently ionizing their atomic constituents with conventional hot-cathode, electron-impact ion sources, species of interest are often distributed in several mass channels in the form of molecular side-band beams. Consequently, beam intensities of the desired radioactive species are diluted. The sputter negative-ion beam-generation technique is particularly effective for simultaneously dissociating molecular carriers and efficiently ionizing highly electronegative atomic constituents. Therefore, a new concept kinetic-ejection negative-ion source (KENIS), based on this principle, was conceived to address this problem. The source has proven to be highly efficient for simultaneously dissociating and negatively ionizing sputter-ejected atomic fluorine from cesiated surfaces. The source has been successfully employed on-line to generate high-intensity $^{17}F^-$ beams for use in the astrophysics research program at the Holifield Radioactive Ion Beam Facility (HRIBF) using the $^{16}O(d,n)^{17}F$ reaction. The mechanical design features, principles of operation, operational parameters, beam quality information (emittance data) and efficiencies for forming intense beams of $^{17}F^-$ during off-line and on-line operation of the source are presented in this report.

[*] Managed by UT-Battelle, LLC, for the U.S. Department of Energy under contract DE-AC05-00OR22725.

[†] Managed by Oak Ridge Associated Universities for the U.S. Department of Energy under contract DE-AC05-00OR22750.

Selection of Refractory Target-Materials and Design of High Efficiency Diffusion-Release Targets for Radioactive Ion Beam Applications

G. D. Alton[1] and Y. Liu

Physics Division, Oak Ridge National Laboratory,[2] Oak Ridge, TN 37831 USA

Many of the reactions fundamentally important in nuclear physics and nuclear-astrophysics are inaccessible to experimental study using stable-beam/stable-target combinations and therefore can only be studied with accelerated radioactive ion beams (RIBs). As a consequence of worldwide interest in these research opportunities, facilities have either been constructed or are under construction for the production and acceleration of RIBs. Several of the facilities utilize the Isotope-Separator-on-Line (ISOL) technique. Experimentally useful RIBs are often difficult to generate by this technique, since they must be diffused from the interior of the target material, effusively transported to the ionization chamber of the source, ionized, extracted, mass-analyzed, and accelerated to research energies in a time-span commensurate with their lifetimes. The speeds at which these processes must take place, impose stringent requirements on the choice of the most appropriate refractory-target-material; on the design of fast diffusion-release targets; on the fabrication and optimization of fast vapor transport systems; and on the choice of the most efficient ion source for RIB generation. In this report, we define criteria for choosing target materials and for designing mechanically stable, short diffusion-length, highly permeable targets, and how vapor pressure, equilibrium concentration, and limiting temperature properties are used to make their selection. We illustrate the viability of the target design philosophy by providing diffusion-release and vapor transport data for a selected number of radioactive species from small diffusion-length, highly-permeable targets that have been successfully used for the generation of RIBs at the Holifield Radioactive Ion Beam Facility (HRIBF).

[1] Direct inquiries concerning this report to: gda@ornl.gov.

[2] Managed by UT-Battelle, LLC, for the U.S. Department of Energy under contract DE-AC05-00OR22725.

Negative Surface Ionization Source Equipped with a Spherical Geometry Lanthanum Hexaboride Ionizer for Production of Negative Halogens for RIB Generation†

H. Zaim,[1, 2] G. D. Alton[1], Y. Liu,[1] S. N Murray[1] and C. A. Reed[1]
[1]*Physics Division, Oak Ridge National Laboratory, Oak Ridge, TN 37831, USA*
[2]*Université de Versailles-Saint-Quentin, Versailles, France*

A versatile, efficient, simple surface ionization source has been designed, fabricated, and initially tested for on-line use in generating radioactive ion beams of members of the group VII A elements (F, Cl, Br, I, and At) for the Holifield Radioactive Ion Beam Facility research program. The source utilizes a solid, spherical geometry, low work function LaB_6 ionizer ($\phi \cong 2.3$ to 3.2 eV)[1] for ionizing highly electronegative atoms and molecules. Despite its widely publicized propensity for being easily poisoned [2], no evidences of this effect were experienced during testing of the source. Off-line evaluation in terms of ionization efficiency for generating beams of Br^- by feeding $AlBr_3$ vapor at low feed rates into the source proved that the source is reliable, stable and easy to operate. The results indicate nominal efficiencies of 15% for Br^- beam generation when taking into accounts the fractional thermal dissociation of the $AlBr_3$ carrier molecule. The design features of the source are illustrated in Figure 1. Principles of operation of the source, initial performance, operational parameter and beam quality data (emittance) are discussed in this report.

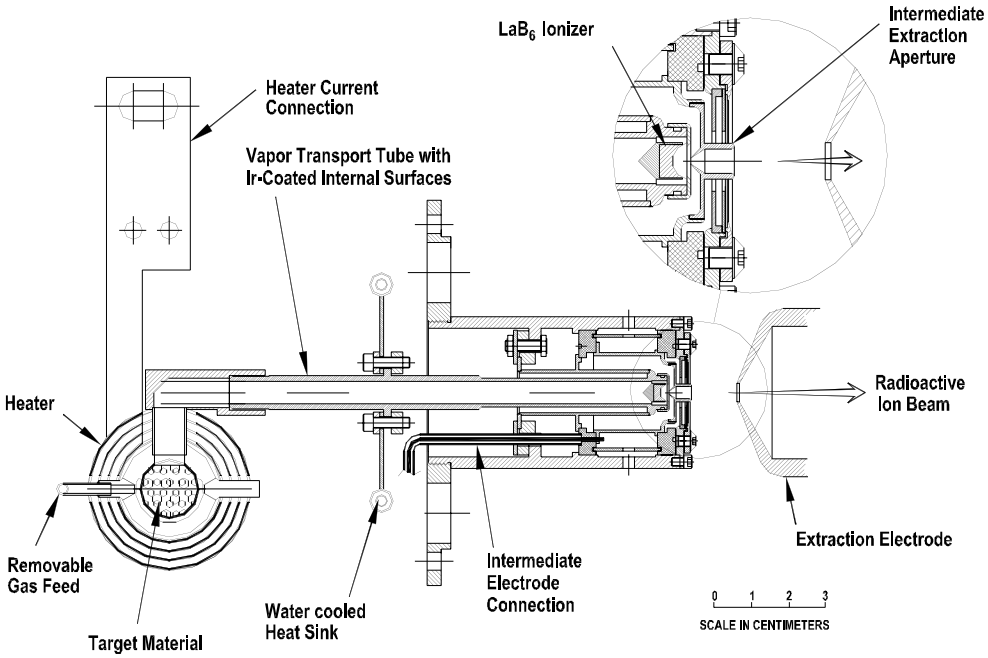

FIG. 1. Schematic drawing of the negative surface ionization source equipped with the spherical geometry LaB_6 ionizer.

† Research sponsored by the U.S. Department of Energy under contract DE-AC05-00OR22725 with UT-Battelle, LLC.

[1] H. Yamauchi, K. Takagi, I. Yuito and U. Kawabe, Appl. Phys. Lett. 29 (1976) 638.
[2] A. Avdienko and M. D. Malev, Vacuum 27 (1977) 583.

Effusive-flow of Pure Elemental Species in Tubular Transport Systems: Radioactive Ion Beam Applications*

J.C.Bilheux[1,2] and G.D.Alton[2]
[1] *Physics Division, Oak Ridge National Laboratory, Oak Ridge, TN 37831, USA*
[2] *University of Versailles, France*

Maximum practically achievable intensities are required for research with accelerated radioactive ion beams (RIBs). The principal means whereby short-lived radioactive species are lost between their formation and their acceleration are time delays due to diffusion from solid or liquid target materials and effusive-flow transport time to the ion source. Then, these delay times must be minimized. We developed an analytical formula that can be used to calculate characteristic effusive-flow times through tubular transport systems, independent of species, tube material, and operational temperature for entirely ideal cases. This equation permits choice of materials of construction on a relative basis that minimize the transport times, independent of transport system geometry and size.

---

*Research at the Oak Ridge National Laboratory is supported by the U.S. Department of Energy under contract DE-AC05-00OR22725 with UT-Battelle, LLC.

Thermal Modeling of UC_2 and ZrO_2 Targets for 1 GeV Protons

Y. Liu, D. Bhowmick, G. D. Alton and J. R. Beene
Physics Division, Oak Ridge National Laboratory,[*] Oak Ridge, TN 37831-6368

The intensity of radioactive ion beams (RIB) produced by the isotope separator on-line (ISOL) technique depends on the production rate and the efficiency with which the radioactive species can be transported out of the target and formed into an ion beam. In order to maximize production rates and minimize transport delay times, targets that operate at the highest practical temperatures and production-beam powers are desirable. High-efficiency-release targets that simultaneously incorporate fast and efficient diffusion release properties have been successfully developed for the generation of useful radioactive ion beam intensities for nuclear physics and nuclear astrophysics research at the Holifield Radioactive Ion Beam Facility (HRIBF). Short diffusion lengths are achieved either by using thin fibrous materials as targets or by coating thin layers of selected target material onto low-density carbon fibers such as reticulated vitreous carbon fiber (RVCF) to form highly permeable composite targets. We have conducted a variety of simulations of 1 GeV protons incident on various low density, highly permeable targets in order to obtain the most uniform power deposition profile. The finite-element thermal analysis code ANSYS was used to model the generation and removal of primary beam deposited heat from these targets. Radiative cooling has been found to be the most effective heat removal means for low-density refractory targets. In this report, we present examples of calculated temperature distributions in UC_2 and ZrO_2 targets using parallel and converging incident 1 GeV proton beams and illustrate the affect of beam heating and radiative cooling on the temperature distributions within a number of fibrous and composite targets.

[*] Managed by UT-Battelle, LLC, for the U.S. Department of Energy under contract DE-AC05-00OR22725.