Laser Operating Procedure for the Negative Ion Neutralizer

4/7/2006

MIRF Ion-Atom Merged-Beams Laser Safety

Action	Date	Signature
Reviewed, Originator	4/7/06	Charles C. Havener
Reviewed, Division Laser Safety Officer (DLSO)	4/7/06	Charles C. Havener
Reviewed, Task Leader/ Lab Space Manager	4/18/07	Fred W. Meyer
Reviewed, ESH Officer	4/7/06	Stephen P. Withrow
Reviewed, Div. Oper. Group Leader	4/7/06	Sandra B. Kennedy
Approved, Line Management	4/18/06	David R. Schultz

DLSO Annual Review	Date	Signature

Distribution List

Name	Title	Email Address
Charles C. Havener	Principal Invest.	havenercc@ornl.gov
Charles C. Havener	DLSO	havenercc@ornl.gov
Fred W. Meyer	MIRF Task Leader	meyerfw@ornl.gov
Fred W. Meyer	Lab Space Manager	meyerfw@ornl.gov
Stephen P. Withrow	ESH Officer	withrowsp@ornl.gov
Sandra B. Kennedy	Div. Op. Group Leader	kennedysb@ornl.gov
David R. Schultz	Line Management	schultzd@ornl.gov
Kevin R. Petherick	ORNL Laser Safety Officer	petherickkr@ornl.gov

Contents

1. Purpose/Applicability

2. Review Period, Record Copies, and Distribution List

3. Definitions

4. General Information

5. Interlock Check

6. Goggles

7. Normal Operation

8. Normal Maintenance

9. Alignment

Appendix A: Requirements and approval list for alignment

Appendix B: Laser System-Specific Training Checklist

1. Purpose/Applicability

1.1 The purpose of this Operating Procedure is to guide all users of the negative ion neutralizer in the Multicharged Ion Research Facility (MIRF) (6000B:B101) through the identification and analysis of potential hazards associated with the operation of the neutralizer. While the neutralizer is constructed from a Class 4 laser cavity (YAG 100 W, CW, 1.06 um), there is no output coupler hence no laser beam exists and there is no radiation outside the laser cavity. While such a configuration is not covered in SBMS, operation of the neutralizer will follow the rules for operation of a Class 1 (embedded Class 4 laser) as provided in SBMS Laser Subject Area. Hazards for lasers include (but are not limited to) those as outlined in the current American National Standard, ANSI Z136.1 and any additional hazards associated with the laser as identified by the owner/operator or Safety Officers. Section 9 contains a step by step procedure for alignment of the Negative Ion Neutralizer. Appendix A has a list of personnel authorized to perform work on the neutralizer with the enclosures removed. Any personnel approved for work in MIRF and a collaborator on the ion-atom merged-beams apparatus is allowed to operate the neutralizer without restriction (as a Class 1 laser). Low power laser training (Module 90125) is suggested but not required (see the ORNL Standard Based Management System (SBMS)). All personnel should report any non-compliance so that the appropriate corrective action can be taken.

2. Review Period, Record Copies, and Distribution List

2.1 The Division Laser Safety Officer shall review this procedure every year, or after major changes to the laser neutralizer.

2.2 A copy of this procedure and distribution list shall be kept in the Laser Log book which is kept near the laser. The

record copy is kept with the Division Operation Group Leader and a copy with signatures in ACTS # 7737

3. Definitions
   - 3.1 **MIRF**: Multicharged Ion Research Facility located in 6000B:B101
   - 3.2 **Service**: Service includes changing the circulating water filter and the deionizer. These items are accessed behind panels on the power supply and are only serviced while the laser is off and external power is disconnected.
   - 3.3 **Spectators**: Personnel who observe the operation of the neutralizer operated as a Class 1 laser.
   - 3.4 **Normal operation**: Operation of the neutralizer as a Class 1 laser; enclosures are in place with interlocks.
   - 3.5 **Alignment**: Any time the neutralizer is operated without the enclosures in place. The neutralizer is considered a Class 4 laser during alignment.
   - 3.6 **Nominal Hazard Zone**: The space within which the level of direct, reflected, or scattered radiation during operation exceeds the applicable MPE. Exposure levels beyond the boundary of the NHZ are below the appropriate MPE level.
   - 3.7 **Maximum Permissible Exposure** (MPE): The level of radiation to which a person may be exposed without hazardous effect or adverse biological changes in the eye or skin.
   - 3.8 **Class 1 laser or laser system**: A Class 1 laser or laser system can not emit accessible radiation levels in excess of the applicable Accessible Emission Limit (AEL). The AEL is established for each wavelength and exposure time by ANSIZ136.1-2000. For 1064 nm CW the AEL is 1.9 E-3 Watts. Operation of a Class 1 laser requires no training or surveillance.
   - 3.9 **Class 1 (embedded Class 4)** Depending on the type of controls (administrative or engineering), the laser or laser

system may, under normal operation, not require high power laser training or other requirements as needed for a Class 4 laser.

3.10 **Class 4 laser or laser system**: A Class 4 laser or laser system emits accessible radiation in excess of the applicable Accessible Emission Limit (AEL). The AEL is established for each wavelength and exposure time by ANSIZ136.1-2000. For 1064 nm, the AEL for a Class 4 laser is 0.5 Watt as specified in ANSI Z136.1-2000.

3.11 **ANSI Z136.1-200**: Current version of the American National Standard for Safe Use of Lasers

3.12 **CW**: Laser radiation emitted continuously, or Constant Wave. Not pulsed.

3.13 **SBMS**: Oak Ridge National Laboratory Standard Based Management System (SBMS). The subject area: Lasers outlines requirements for all aspects of laser use.

4. General Information

4.1 Principal Investigator (PI): Charles C. Havener, Tel # 574-4704
Location: Physics Division, 6000B:B101.

4.2 Negative Ion Neutralizer: The negative ion neutralizer is an integral part of the ion-atom merged-beams apparatus which is currently connected to the high energy beamline at MIRF. The neutralizer system is shown schematically in Fig. 1 and consists of the optical cavity of a 1.06 um 100 Watt continuous wave

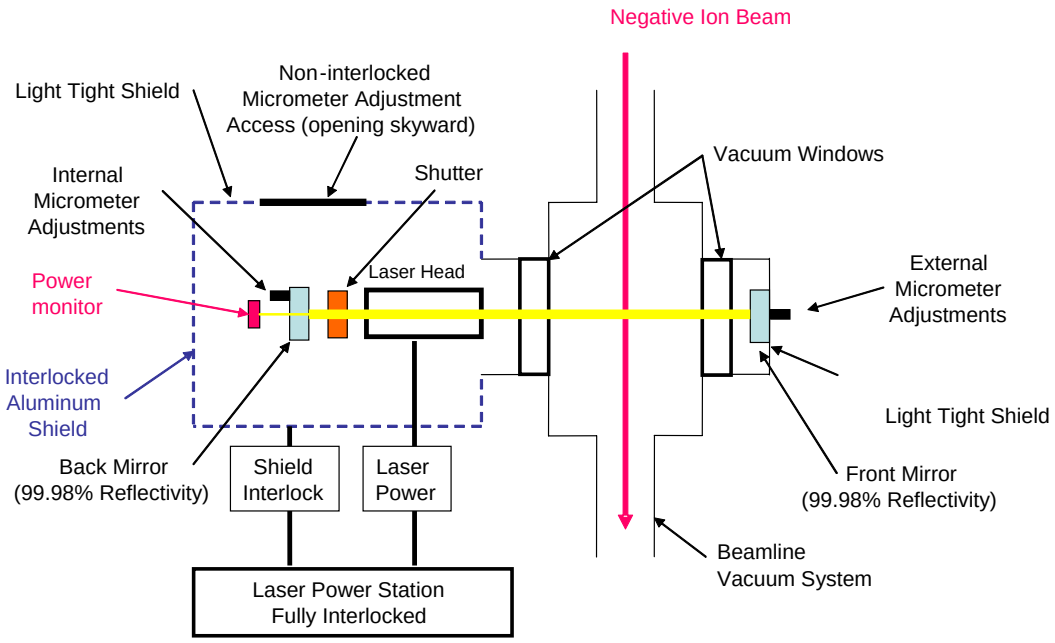

Fig. 1 Schematic of the negative ion neutralizer system (6000B:B101). The photon flux circulates in the cavity between the front and back mirrors and intersects the negative ion beam.

(CW) Nd:YAG Laser (Quantronix Model 117 with Model 224 Power Supply/Controller). During operation a negative ion beam crosses the photon flux in the cavity resulting in neutralization (photodetachment) of the negative ions. Intense ion beams are then merged with the resultant neutral beam producing low energy collisions in the center-of-mass frame. For this application the original laser has been reconfigured as follows: The 10% output coupler that was shipped with the original laser has been replaced with a 99.98% reflective dielectric flat mirror. There is no laser beam extracted from the laser cavity. The cavity (see Fig. 1) now consists of a power monitor (silicon diode module monitoring a minute sampling of the cavity power transmitted by the back mirror), the back mirror (dielectric flat with 99.98% reflectivity), electro-mechanical shutter that can be operated remotely and spoils

the cavity suppressing laser oscillation, the head containing the arc lamp and YAG rod, the anti-reflective coated atmosphere/vacuum window, a vacuum chamber, another anti-reflective coated atmosphere/vacuum window, and a front mirror (a dielectric flat with 99.98% reflectivity). All these components except the front mirror and vacuum windows are mounted on an optical rail and surrounded by a heavy-gauge metal shield. Full access to these components is achieved through a bolted down cover interlocked with the main power supply by a set of redundant electrical series-connected microswitches. There is limited access through the top of the shield for alignment of the back mirror which must be done while the laser is operating. The shield mates directly to the beamline vacuum system where one of the vacuum windows is mounted. The vacuum chamber then surrounds the cavity which is terminated at the front mirror after passing through the vacuum window. This mirror is mounted outside vacuum on a sealed cover and adjusted via micrometers. Any attempt to remove the sealed mirror cover results in misalignment of the mirror and spoiling the cavity. Within this vacuum chamber between the two mirrors, a negative ion beam intersects the photon flux circulating in the laser cavity.

The power supply (Model 224) for the neutralizer contains the power supply and a remote control module that is fully interlocked with a key as is required for a Class 4 laser (the original configuration from the manufacturer). The location of the laser power supply and negative ion neutralizer at MIRF is shown in Fig. 2.

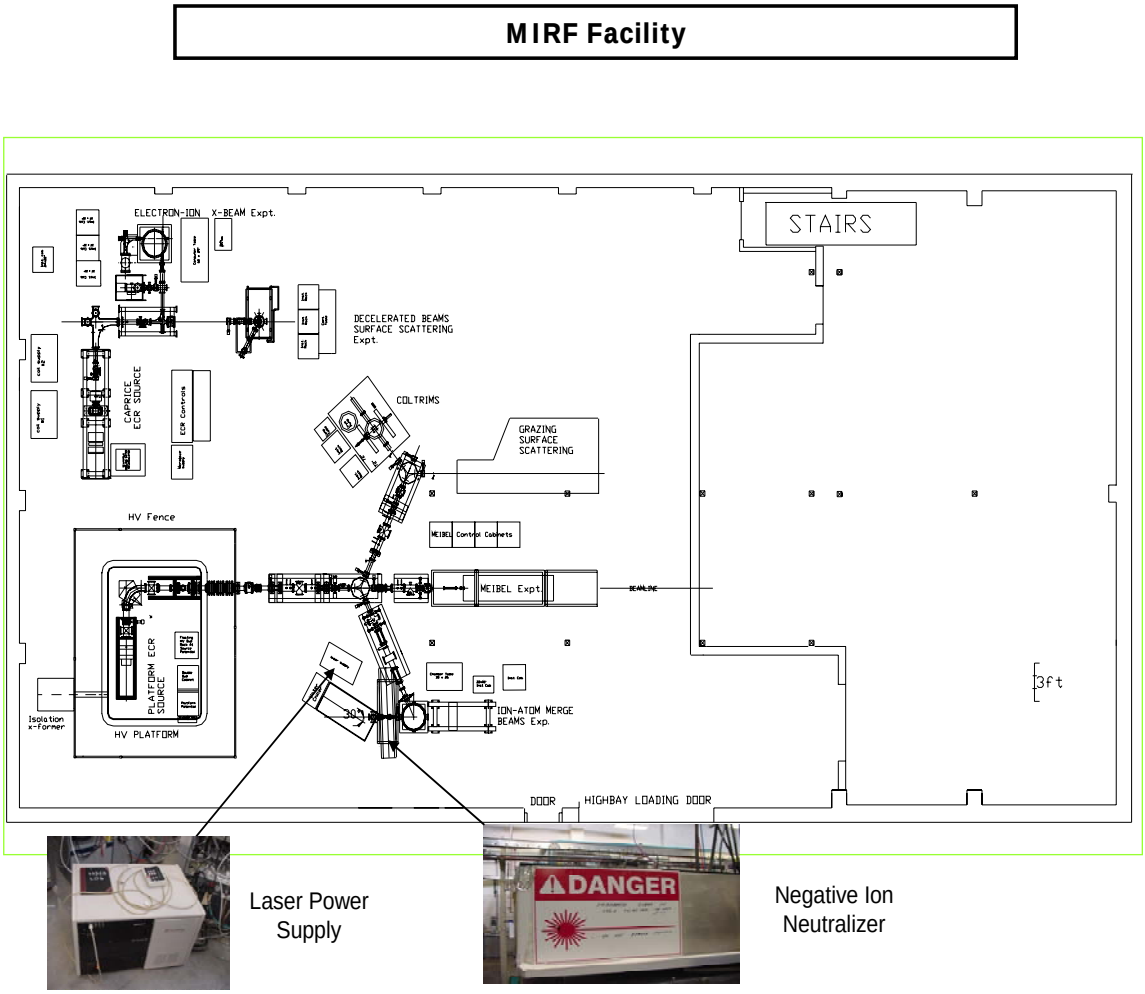

Fig. 2 MIRF facility showing the location of the laser power supply and the Negative Ion Neutralizer on the ion-atom merged-beams apparatus.

4.3 Hazards

Possible hazards involving the routine operation of lasers include:

1. Beam hazard to eyes.
2. Beam hazard to skin.
3. Scattered and/or diffuse energy

The 1.06 micron radiation is invisible to the eye and therefore especially hazardous. The human eye does not protect itself (blink

response) if an exposure occurs. According to the ANSI standard the maximum permissible exposure (MPE) for 1.06 micron radiation is 1.9 mW/cm^2 for ocular exposure and 1 W/cm^2 for exposure to the skin. While the present configuration does not involve an actual laser beam there may be hazardous sources of radiation. The cavity has vacuum windows which could reflect 1.06 micron radiation out of the cavity. Also a decrease in the high reflectivity of the front or rear mirror could result in a small amount of power coupled out of the cavity. Since the power supply/laser head is designed for a 100 Watt laser beam, it is reasonable to assume that any radiation source could be up to several watts of power.

4.4 Laser Log Book

A laser logbook is kept near the negative ion neutralizer in the ion-atom merged-beams area. The logbook contains a copy of the laser procedure, maintenance, and records of quarterly inspections.

4.5 Spectators

During normal operation the neutralizer is classified as a Class 1 laser and there are no restrictions on personnel in the room.

4.6 Emergency Off

The neutralizer is controlled by the remote control module. Rotating the key to the left shuts the neutralizer down. The power to the laser is fed from Breaker Box EP-7 (west wall), breaker # 26,28,30 (labeled).

4.8 Related subject areas and references

4.81 SBMS Subject area: Lasers

4.82 ANSI Z136.1-2000, available from the DLSO

4.83 Multicharged Ion Research Facility Procedure

4.84 Laser Hazard Evaluator; software from Laser Institute of America, available from the DLSO.

4.85 Quantronix Laser Manual, available at MIRF

5.0 Interlock Check

Laser Interlock check: performed on a quarterly basis. To perform the checks, lift cover, and verify that the power supply turns off or does not turn on. To verify that each interlock works separately (there are two interlocks in series) use an ohmmeter across both interlocks and observe the operation of each separately by leaving the other interlock in the closed position. Document in the laser log book. Documentation with reminders is also in ACTS 8507.1.

6.0 Goggles

Goggles available for use during maintenance include two plastic goggles with an OD = 7, and one with a glass window with an OD = 17. An OD of 7 corresponds to an attenuation of 10^7. For both goggles, 100 Watts would be attenuated below the MPE for 1.06 micron radiation (5 mW, see ANSI Z136.1. However, the goggles (especially the plastic) are not designed to attenuate a full beam for any length of time. Plastic goggles do not protect from direct observation of a laser beam!!

7.0 Normal Operation

The laser oscillator is totally controlled from the remote control module, from which the cavity power can be adjusted and the electromechanical shutter can be activated. The start up and shut down of the neutralizer are discussed in the manual for the laser. Since the laser cavity is enclosed within an interlocked shield, the

neutralizer system is classified as a Class 1 laser. The access panel for the back mirror adjustment (see the alignment section) and the cover around the front mirror are not interlocked but have an ANSI Laser Danger warning label, with the instructions “Do Not Remove Panels”, or require a tool to remove.

In several years of service in this configuration we have found that the front mirror in the cavity needs to be adjusted after several days of operation. This is done external to all shields by simple mechanical adjustment of the micrometers on the front mirror mount. At no time is the operator or anyone in the room exposed to any laser radiation during normal operation, including adjustment of the front mirror (see Fig.1)

8. Service

Normal service, as specified in the laser manual, requires changing the circulating water filter and the deionizer. These items are accessed behind panels on the power supply and are only serviced while the laser is off and external power is disconnected. This maintenance can be performed without any special laser training.

9.0 Alignment:

The arc lamp, vacuum windows, or front and back mirrors occasionally need maintenance. Replacement is performed with the laser off, external power disconnected, and all panels around the laser cavity removed. After replacing any of these items it is necessary to readjust both the front and back mirror. Initial alignment is done with the shields removed and a Class 2 He-Ne alignment visible laser. The He-Ne alignment laser is directed through all the elements sequentially, adjusting each element so that the back reflections are all aligned (see laser manual).

However, final alignment requires the laser energized. In this configuration the whole room is considered a Nominal Hazard Zone. Administrative controls are used.

The following can only be performed by laser trained personnel listed in Appendix A.

9.1 Steps to establish and de-establish administrative controls for final alignment of the negative ion neutralizer in 6000B:B101.

9.11 All personnel in 6000B:B101 working on the neutralizer during final alignment must be approved (complete requirements listed in Appendix A), and wear laser goggles.

9.12 Entrances to 6000B:B101 shall be blocked with a yellow chain, and posted with a "do not enter" laser hazard sign. The lab phone number will be written on the sign so persons outside can request entry. Other personnel can be given permission by the one doing the alignment (listed in Appendix A) to be in MIRF (away from the vicinity of the laser) only when the current hazards are explained, and laser goggles with an OD of at least 7 for 1.06 um are worn.

9.13 OD 7 laser goggles appropriate for 1.06 um wavelengths shall be worn by everyone in the room. Care will be taken to remove jewelry and dangling badges for those working near the laser cavity.

9.14 An announcement shall be made that the laser is to be turned on.

9.15 The laser cavity is energized and alignment is performed. Adjustments are made without introducing reflective tools in the cavity. Alignment consists of adjusting the front and back mirrors to initiate lasing. Lasing is monitored by neutral beam generation or by power leakage out the back of the back mirror, measured with a phototransistor supplied by the laser manufacturer.

9.16 After alignment is complete, turn laser off. Inform all personnel in the room that the laser is off. Take down signs and reinstall cover.

9.17 Log alignment event in laser logbook.

9.2 Back Mirror Adjustment

Occasionally there is a need to adjust the back mirror after the interlocked shields are in place. (Disassembling or reassembling the shields can cause the mirrors to lose alignment). This is accomplished by removing the top panel of the enclosure, reaching in, and adjusting the micrometers. Since the cavity is not disturbed during this process the most likely hazard is diffuse reflections directed up toward the high ceiling. The personnel performing this operation shall be laser trained (listed in Appendix A) and shall wear laser safety goggles. Any radiation would be directed up toward the high ceiling and not be a hazard to anyone in the room {for diffusive reflections from a 100 Watt laser beam any personnel at a distance greater than 80 cm would not be exposed to radiation above the ocular MPE (source, Laser Hazard Evaluator)}. Administrative controls (posted signs or personnel standing guard) will be used to restrict non-authorized personnel within direct sight of the neutralizer.

Appendix A

Personnel allowed to perform Alignment or Back Mirror Adjustment on the Negative Ion Neutralizer.

Requirements:

1. High Power Laser Training (ORNL Module 90872) and retraining every three years
2. Documented Laser Eye Exam
3. Read and understand this operating procedure
4. Review the ORNL SBMS Subject Area: Lasers.
5. Staff other than the PI (Havener) must complete a laser site-specific training checklist (see Appendix B) with the PI.

Personnel Allowed To Align Laser	Signature	Date
Charles C. Havener	Charles C. Havener	4/18/06

Appendix B

Laser System-Specific Training Checklist

Laser User	
Principal Investigaor (PI)	
Laser System	

Topic	User Signature/Date	Owner Signature/Date
High Power Laser Training • Laser Classifications • Specific Laser Hazards • Maximum Permissible Exposure • Laser procedure • Laser Authorization • Good Practice in Lab		
Interlocks • Configuration • Operation		
Laser Output Characteristics • Wavelength • Pulse energy/ Average Power		
Goggles • Optical Density • Damage Threshold (plastic or glass) • Use		
Normal Operation • Power on/off • Shutter operation • Normal experimental configuration • Nominal Hazard Zone		
Non-Normal Operation • Gross Alignment (hands on demonstration) • Troubleshooting		
Laser Safety Officer • Laser Safety Resource • Inspections for New or Reconfigured Systems		